STARBUCKS SHELL CONSTRUCTION

1990 STATE ROAD 19
TAVARES, FL 32788

PROJECT SUMMARY

THE SCOPE OF WORK PROPOSED UNDER THIS PERMIT INCLUDES ALL CONSTRUCTION NECESSARY FOR THE SHELL CONSTRUCTION OF A BUILDING (2,448 SQ.FT. - ENCLOSED) FOR ASSEMBLY OCCUPANCY. PLANS FOR CONSTRUCTION INCLUDE ALL STRUCTURAL COMPONENTS (EXCEPT FLOOR SLAB) AND FINISHES THAT COMPRISE THE BUILDING ENVELOPE. PLANS ALSO INCLUDE THE NECESSARY UTILITY STUB-INS FOR SANITARY SEWER AND DOMESTIC WATER AND ELECTRICAL POWER. IT IS ANTICIPATED THAT THE STARBUCKS INTERIOR FINISH-OUT WILL BE BE CONSTRUCTED SIMULTANEOUSLY, UNDER SEPARATE PERMIT. SAID PLANS AND CONSTRUCTION WILL INCLUDE PERMANENT POWER, EXIT/EMERGENCY LIGHTING, ETC.

UNDER THE TERMS OF THE LEASE WITH STARBUCKS, THE LANDLORD WILL BE RESPONSIBLE FOR ADDITIONAL WORK INCLUDING, BUT NOT LIMITED TO, THE INSTALLATION OF ROOFTOP HVAC UNITS. IN ORDER TO FULLY AND ACCURATELY DOCUMENT SUCH WORK, PLANS FOR STARBUCKS INTERIOR FINISH-OUT MUST BE COMPLETED (CURRENTLY IN PRODUCTION BY OTHERS). UPON RECEIPT OF TENANT PLANS, REVISIONS WILL BE MADE TO THESE SHELL DOCUMENTS WHICH WILL FULLY DOCUMENT ALL LANDLORD RESPONSIBILITIES. ACCORDINGLY, REVISIONS WILL BE SUBMITTED TO THE BUILDING DEPARTMENT FOR REVIEW AND APPROVAL PRIOR TO CONSTRUCTION. IT IS THE LANDLORD'S INTENT TO BEGIN THE PROCESS FOR REVIEW AND PERMIT OF THE SHELL DOCUMENTS PROVIDED HEREIN IN ORDER TO MEET OBLIGATIONS FOR DELIVERY OF THE BUILDING.

THE ABOVE-MENTIONED CONSTRUCTION DRAWINGS FOR STARBUCKS INTERIOR FINISH-OUT SHALL BE SUBMITTED TO THE AUTHORITY HAVING JURISDICTION FOR APPROVAL AND PERMIT PRIOR TO CONSTRUCTION (BY OTHERS).

FLORIDA PRODUCT DATA INDEX

PRODUCT CATEGORY	SUB CATEGORY	MANUFACTURER	FL APPROVAL NO.	DATE APPROVED
PANEL WALLS	ALUM STOREFRONT	YKK AP AMERICA	FL-12062	04/12/22
PANEL WALLS	SIDING	NICHIHA CORPORATION	FL-42392.1	9/14/23
EXTERIOR DOORS	ALUM. ENTRANCES	YKK AP AMERICA	FL-12823	10/12/21
EXTERIOR DOORS	COMMERCIAL STEEL DOORS	CECO DOOR PRODUCTS	FL-4553-R13	12/10/20
ROOFING	SINGLE-PLY ROOFING SYSTEMS (TPO)	HOLOM SOLUTIONS & PRODUCTS	FL-10264-R17	06/20/23
WINDOWS	PASS THRU	READY ACCESS	FL-5102.1	10/13/20
STRUCTURAL COMPONENT	PRODUCT INTRODUCED AS A RESULT OF NEW TECH	CAST-CRETE USA, INC.	FL-658R14	08/12/21

THE PRODUCTS LISTED ABOVE ARE THE BASIS OF DESIGN

THE CONTRACTOR SHALL MAKE AVAILABLE TO THE BUILDING INSPECTOR DOCUMENTATION NECESSARY TO VERIFY THAT ALL COMPONENTS REQUIRING PRODUCT APPROVAL PER FS 553.842 ARE IN COMPLIANCE WITH PRODUCT APPROVAL INSTALLATION REQUIREMENTS

PROJECT CODE DATA

APPLICABLE CODES

- FLORIDA BUILDING CODE-BUILDING (8TH EDITION)
- FLORIDA BUILDING CODE-EXISTING (8TH EDITION)
- FLORIDA BUILDING CODE-ACCESSIBILITY (8TH EDITION)
- FLORIDA BUILDING CODE-ENERGY CONSERVATION (8TH EDITION)
- FLORIDA BUILDING CODE-FUEL GAS (8TH EDITION)
- FLORIDA BUILDING CODE-MECHANICAL (8TH EDITION)
- FLORIDA BUILDING CODE-PLUMBING (8TH EDITION)
- NATIONAL ELECTRIC CODE (2020 EDITION)
- FLORIDA FIRE PREVENTION CODE (8TH EDITION)

BUILDING STATISTICS

OCCUPANCY	GROUP (A-2) ASSEMBLY
CONSTRUCTION TYPE	TYPE VB, UNPROTECTED
FIRE SPRINKLERED	NO
FIRE ALARM	NO
ALLOWABLE AREA	6,000 GROSS SQ.FT.
PROPOSED AREA	2,448 SQ.FT. (ENCLOSED) + 443 SQ.FT. (COVERED OUTDOOR SEATING) =2,891 SQ.FT. (UNDER ROOF)
NO. OF STORIES	3 ALLOWED / 1 PROPOSED
PROPOSED HEIGHT	40'-0" ALLOWED / 18'-0" (TOP OF PARAPET)
OCCUPANT LOAD	OCCUPANT LOAD = 72 (PER TENANT'S PLAN & CALCULATED LOAD) OCCUPANT LOAD BASED ON MOST RESTRICTIVE VALUES FROM BOTH THE BUILDING AND FIRE CODE. AREAS BASED ON TENANT'S FIXTURE PLAN. THE OCCUPANT LOAD WILL BE FULLY DESCRIBED IN THE TENANTS INTERIOR FINISH-OUT DRAWINGS TO BE SUBMITTED UNDER SEPARATE PERMIT.
MAXIMUM TRAVEL DISTANCE	200' (NON-SPRINKLERED)
MAX. DEAD END CORRIDOR	20'
EGRESS WIDTH REQUIRED	.2" PER OCCUPANT = .2" X 72 = 14.4"
EGRESS WIDTH PROVIDED	150" (THREE EXITS)
MINIMUM CORRIDOR WIDTH	44" REQUIRED, NOT APPLICABLE, CORRIDORS TO BE PROVIDED BY TENANT UNDER SEPARATE PERMIT
MINIMUM STAIR WIDTH	NOT APPLICABLE, SINGLE STORY BUILDING PROPOSED
FIRE RATINGS-TABLE 601	PRIMARY STRUCT. FRAMEWORK 0 BEARING WALLS 0 EXTERIOR WALLS AND OPENINGS (SEE BELOW) FIRE DIVISION WALLS N/A INTERIOR BEARING WALLS 0 FLOOR CONSTRUCTION N/A ROOF CONSTRUCTION 0

TABLE 602 - FIRE RESISTANCE RATINGS FOR EXTERIOR WALLS BASED ON FIRE SEPARATION DISTANCE

	SEPARATION DISTANCE	FIRE RATING	WALL AREA	OPENING AREA	% OPENINGS ALLOWED	% OPENINGS PROPOSED
EAST	> 30'	0	*	*	NL	*
NORTH	> 30'	0	*	*	NL	*
WEST	> 30'	0	*	*	NL	*
SOUTH	> 30'	0	*	*	NL	*

* WHERE SEPARATION FROM PROPERTY LINES EXCEEDS 30 FEET, THERE ARE NO LIMITS FOR UNPROTECTED WALL OPENINGS. CALCULATIONS FOR WALL AREA, OPENING AREA AND PROPOSED OPENING PERCENTAGES NOT PROVIDED IN SUCH INSTANCES

MIN. FIRE RESISTANCE OF WALLS, PARTITIONS AND OPNG PROTECTIVES

SHAFT ENCLOSURES	NOT APPLICABLE
EXIT ACCESS CORRIDORS	NOT APPLICABLE
TENANT SEPARATION	NOT APPLICABLE
OCCUPANCY SEPARATION	NOT APPLICABLE
FLOOR PENETRATIONS	NOT APPLICABLE

MINIMUM PLUMBING FIXTURES TOILET ROOMS AND PLUMBING FIXTURES ARE NOT INCLUDED IN THE PROPOSED SCOPE OF WORK (SHELL CONSTRUCTION ONLY). THESE WILL BE PROVIDED BY THE TENANT UNDER SEPARATE PERMIT.

CONSTRUCTION DRAWINGS FOR THE INTERIOR FINISH-OUT DOCUMENTS SHALL BE PROVIDED BY THE TENANT AND SUBMITTED TO THE AUTHORITY HAVING JURISDICTION FOR APPROVAL AND PERMIT PRIOR TO CONSTRUCTION.

GENERAL NOTES

1. ALL WORK SHALL BE PERFORMED IN A FIRST CLASS, WORKMANLIKE MANNER ACCORDING TO BEST TRADE PRACTICES. MATERIALS AND EQUIPMENT SHALL BE NEW, AND ALL CONSTRUCTION SHALL BE IN GOOD AND USABLE CONDITION AT THE DATE OF COMPLETION AND/OR OPENING OF THE DEMISED PREMISES FOR BUSINESS.
2. ALL WORK SHALL BE PERFORMED IN ACCORDANCE WITH ALL FEDERAL, STATE AND LOCAL AUTHORITIES OR AGENCIES HAVING JURISDICTION AND IN ACCORDANCE WITH THE TENANT'S DRAWINGS AND SPECIFICATIONS.
3. THE CONTRACTOR SHALL VERIFY EXISTING CONDITIONS OF THE SITE. **DISCREPANCIES SHALL BE REPORTED TO THE ARCHITECT PRIOR TO PROCEEDING W/ CONSTRUCTION.**
4. TEMPORARY ELECTRIC POWER AND LIGHTING WILL BE PROVIDED AS REQUIRED. THE TEMPORARY SERVICE MUST MEET ALL APPLICABLE CODE AND SAFETY REQUIREMENTS.
5. THE GENERAL CONTRACTOR SHALL PROPERLY PROTECT THE WORK FOR PUBLIC SAFETY AND AGAINST ACCIDENTS, WEATHER OR ANY OTHER HAZARD WITH LIGHTS AND GUARD RAILS OR BARRICADES AS APPLICABLE.
6. ALL EXITS SHALL BE MAINTAINED AND SHALL BE OPERABLE FROM THE INSIDE W/OUT SPECIAL KNOWLEDGE OR EFFORT.
7. THE CONTRACTOR SHALL BE RESPONSIBLE FOR THE PROPER LOCATION AND SIZE OF OPENINGS FOR ALL TRADES AND SHALL COORDINATE ALL CONSTRUCTION AS INDICATED BY THE CONSTRUCTION DOCUMENTS, INCLUDING SHOP DRAWINGS REVISED BY THE ARCHITECT.
8. GENERAL CONTRACTOR IS RESPONSIBLE FOR ALL NECESSARY AND REQUIRED PERMITS, FEES, DEPOSITS, ETC.
9. A FIRE EXTINGUISHER IS REQUIRED DURING CONSTRUCTION. THE CONTRACTOR SHALL MAKE ALL PERSONNEL AWARE OF ITS LOCATION.
10. THE CONTRACT DOCUMENTS HAVE BEEN PREPARED TO BE COMPLEMENTARY. WHAT IS REQUIRED BY THE DRAWINGS SHALL BE REQUIRED BY THE SPECIFICATIONS, AND CONVERSELY. IN THE CASE OF DISCREPANCIES BETWEEN THE TWO DOCUMENTS CONCERNING QUALITY AND/OR QUANTITY, THE CONTRACTOR SHALL INCLUDE THE BETTER QUALITY AND/OR GREATER QUANTITY UNLESS OTHERWISE DIRECTED IN WRITING BY THE ARCHITECT. WHERE SPECIFICATIONS HAVE BEEN OMITTED FOR PARTICULAR ITEM(S), THE CONTRACTOR SHALL EMPLOY THE HIGHEST STANDARDS ESTABLISHED BY THE MANUFACTURER OF THE ITEM(S) AS THE GUIDELINES FOR PRODUCT HANDLING, INSTALLATION OR ERECTION AND PROTECTION OF THE COMPONENT ONCE IN PLACE.

PERMIT NOTES

SIGNAGE:

SIGNAGE DEPICTED IN THESE DOCUMENTS ARE FOR COORDINATION PURPOSES ONLY. IT SHALL BE UNDERSTOOD THAT ALL EXTERIOR BUILDING MOUNTED AND SITE SIGNAGE WILL BE PERMITTED SEPARATELY, EITHER BY THE LANDLORD'S SIGN VENDOR OR BY INDIVIDUAL TENANT SIGN VENDORS. AT THAT TIME, COMPLETE DETAILS INCLUDING, BUT NOT LIMITED TO, SIGN FABRICATION, SIGN INSTALLATION, SIGN AREA AND QUANTITIES, ETC. WILL BE SUBMITTED FOR PERMIT REVIEW AND APPROVAL PRIOR TO COMMENCEMENT OF WORK.

SHOP DRAWINGS:

IT SHALL BE UNDERSTOOD THAT ENGINEERED SHOP DRAWINGS FOR PRE-ENGINEERED ROOF JOISTS SHALL BE PROVIDED BY MANUFACTURER AND SUBMITTED TO THE BUILDING DEPARTMENT BY THE GENERAL CONTRACTOR. SAID SHOP DRAWINGS SHALL CONTAIN A STATEMENT FROM THE PROFESSIONAL OF RECORD STATING THAT HE/SHE HAS REVIEWED THE DRAWINGS AND THAT DRAWINGS ARE IN COMPLIANCE WITH HIS/HER DESIGN BY NAMING THE MANUFACTURER, JOB NUMBER AND DATE OF THE PLANS.

PERMITS:

SEPARATE PERMITS WILL BE REQUIRED FOR THE DUMPSTER ENCLOSURE, AWNINGS AND PRE-ENGINEERED CANOPIES. SAID PERMITS SHALL BE OBTAINED PRIOR TO COMMENCEMENT OF WORK ON ANY OF THESE COMPONENTS.

FINISH NOTES

1. SUBCONTRACTORS MUST EXAMINE EACH INSTALLATION AREA FOR CONDITIONS THAT MAY INTERFERE WITH PROPER, TIMELY, OR ACCEPTABLE COMPLETION OF THE WORK AND SHALL NOTIFY THE GENERAL CONTRACTOR OF UNACCEPTABLE CONDITIONS BEFORE FINISH MATERIAL INSTALLATION. PERFORMANCE OF FINISH WORK INDICATES ACCEPTANCE OF ALL SUBSTRATE CONDITIONS AND ASSUMPTION OF RESPONSIBILITY FOR COMPLIANCE WITH MATERIAL INSTALLATION QUALITY STANDARDS.

2. CONTRACTOR TO PREPARE FLOOR SUBSTRATE CONDITIONS (WHERE APPLICABLE) AS NECESSARY WHERE DIFFERENT MATERIALS ABUT TO ENSURE SMOOTH AND GRADUAL TRANSITION, FREE FROM TRIP HAZARD OR EXCESSIVE ELEVATION CHANGE. PROVIDE TRANSITION EDGES AS APPROPRIATE. SUBMIT ACCESSORY OPTIONS, INCLUDING AVAILABLE FINISH AND COLOR SELECTIONS FOR APPROVAL.

3. WHERE NO FLOOR FINISH IS REQUIRED, CONTRACTOR SHALL PROVIDE A CLEAN SMOOTH SURFACE FOR FINISHES PROVIDED BY TENANT.

4. FOR PAINTED / STAINED SURFACES, ADHERE TO INDUSTRY STANDARDS AND USE PRIMERS, PAINT, STAINS, AND OTHER PRODUCTS AS APPROPRIATE FOR THE CONDITIONS AND SUBSTRATES TO WHICH FINISHES ARE BEING APPLIED.

5. ALL GWB SURFACES THAT ARE NOT TO BE PAINTED UNDER THE SCOPE OF THIS CONTRACT (PAINT BY TENANT) ARE TO BE TAPED, MUDDED AND SANDED. WALLS SHALL BE LEFT IN A CONDITION READY FOR TEXTURE AND PAINT BY TENANT.

6. ACCEPTABLE PAINT MANUFACTURERS ARE BENJAMIN MOORE OR SHERWIN WILLIAMS. REFER TO SPECIFICATIONS FOR TYPE OF PAINT.

7. ALL COLOR SELECTIONS, IF NOT INDICATED ON PLANS, SHALL BE MADE BY THE TENANT FROM THE MANUFACTURER'S STANDARD SELECTIONS PROVIDED BY THE CONTRACTOR, UNLESS OTHERWISE NOTED.

ALL WALL AND CEILING FINISHES SHALL COMPLY WITH FLORIDA FIRE PREVENTION CODE SECTION 10.2.3 AND SHALL BE CLASS A OR B IN EXITS AND ENCLOSED CORRIDORS FURNISHING ACCESS TO EXITS; AND CLASS A, CLASS B OR CLASS C IN OFFICES.
INTERIOR FLOOR FINISHES SHALL COMPLY WITH FLORIDA FIRE PREVENTION CODE SECTION 10.2.7 AND SHALL BE CLASS I OR CLASS II IN CORRIDORS AND EXITS

PROJECT TEAM

DEVELOPER

RED BELL PARTNERS
2469 N. JOHN YOUNG PARKWAY
SUITE C
ORLANDO, FL 32804
ATTN: NICK JONES
TEL: (206) 931-0526

BUILDING DEPARTMENT

CITY OF TAVARES
BUILDING DEPARTMENT
201 EAST MAIN STREET
TAVARES, FLORIDA 32778
ATTN: COMMERCIAL PLAN REVIEW
TEL: (352) 742-6213

CIVIL ENGINEER

INTERPLAN LLC
220 E. CENTRAL PARKWAY
SUITE 4000
ALTAMONTE SPRINGS, FL 32701
ATTN: CHRIS BLURTON
TEL: (407) 654-5008

MECHANICAL & PLUMBING

STEPANEK-LEWIS AND ASSOCIATES, INC.
2257 TWELVE OAKS WAY, SUITE 103
WESLEY CHAPEL, FLORIDA 33544
ATTN: MATT LEWIS
TEL: (813) 991-1248

ARCHITECT

FWH ARCHITECTS, INC.
3336 GRAND BLVD. SUITE 201
HOLIDAY, FLORIDA 34690
ATTN: ADRIENNE BAUER
TEL: (727) 815-3336

STRUCTURAL ENGINEER

ACG PROFESSIONAL ENGINEERING
16912 MELISSA ANN DRIVE
LUTZ, FLORIDA 33558-8049
ATTN: ALAN GUENTHER
TEL: (813) 963-1906

ELECTRICAL ENGINEER

CHEHAYEB & ASSOCIATES
3702 AZEELE STREET
TAMPA, FLORIDA 33609
ATTN: SOUHEIL CHEHAYEB
TEL: (813) 876-1415

WIND DESIGN CRITERIA

1. ULTIMATE WIND SPEED = 132 MPH (FBC FIGURE 1609.3(1))
2. WIND EXPOSURE "C"
3. BUILDING RISK CATEGORY II (PER FBC TABLE 1604.5)
4. INTERNAL PRESSURE COEFFICIENT
   (GCpi) = +/- 0.18, TOTALLY ENCLOSED
   (PER ASCE 7-22)
5. COMPONENTS AND CLADDING - REFER TO STRUCTURAL DRAWINGS FOR WIND DESIGN CRITERIA

VICINITY MAP

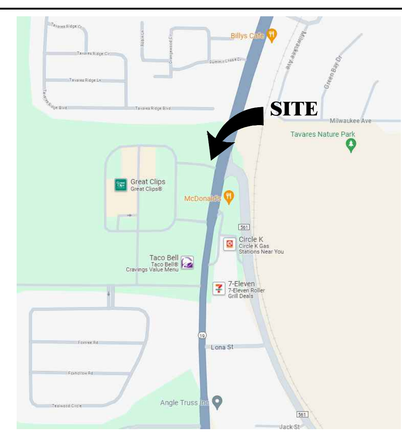

DRAWING INDEX

SHT. NO.	DRAWING TITLE
A0	INDEX, VICINITY MAP AND NOTES
CIVIL, LANDSCAPE AND IRRIGATION PLANS HAVE BEEN SUBMITTED UNDER SEPARATE PERMIT	
ARCHITECTURAL	
A0.1	SPECIFICATIONS
A0.1A	SPECIFICATIONS
A0.2	SPECIFICATIONS
A0.3	KEYNOTE SCHEDULE
AS.1	ARCHITECTURAL SITE PLAN
AS.2	MISCELLANEOUS SITE DETAILS
A1.0	FLOOR PLAN AND NOTES
A1.1	ROOF PLAN
A1.2	ROOF DETAILS
A1.2A	ROOF DETAILS
A1.3	CANOPY DETAILS
A2.0	REFLECTED CEILING PLAN
A3.0	EXTERIOR ELEVATIONS AND EXTERIOR FINISH SCHEDULE
A3.1	EXTERIOR ELEVATIONS
A4.0	FRAME OPENING SCHEDULE
A4.1	FRAME OPENING DETAILS
A4.2	ENLARGED PLAN DETAILS
A5.0	WALL SECTIONS
A5.1	WALL SECTIONS
A5.2	WALL SECTIONS
STRUCTURAL	
S0.1	STRUCTURAL NOTES
S1.1	FOUNDATION PLAN
S2.1	ROOF FRAMING PLAN
S3.1	WALL SECTIONS
S4.1	SECTIONS AND DETAILS
S4.2	SECTIONS AND DETAILS
S4.3	SECTIONS AND DETAILS
MECHANICAL	
M1.0	MECHANICAL SPECIFICATIONS
M2.0	MECHANICAL ROOF PLAN
M3.0	MECHANICAL DETAILS & SCHEDULES
PLUMBING	
P1.0	PLUMBING NOTES AND SPECIFICATIONS
P2.0	PLUMBING FLOOR PLAN
P3.0	PLUMBING SCHEDULES, RISERS AND DETAILS
ELECTRICAL	
E0.0	ELECTRICAL PROJECT NOTES AND LEGEND
E1.0	ELECTRICAL SITE PLAN
E1.1	PHOTOMETRIC SITE PLAN
E1.2	FIXTURE INFORMATION
E2.0	LIGHTING AND POWER PLANS
E3.0	POWER RISER DIAGRAM
E4.0	ELECTRICAL SPECIFICATIONS

REVISION LOG
● INDICATES SHEETS AFFECTED

FWH Architects
3336 Grand Blvd. Suite 201
Holiday, Florida 34690
Ph. 727. 815. 3336
Fax 727. 815. 3337

TO THE BEST OF THE KNOWLEDGE OF THE ARCHITECTS AND ENGINEERS, PLANS AND SPECIFICATIONS COMPLY WITH THE APPLICABLE MINIMUM BUILDING CODES AND THE APPLICABLE MINIMUM FIRE SAFETY STANDARDS

GUY F. FABER
FL License No. AR0015323

no.	date	revision descriptions

STARBUCKS
SHELL CONSTRUCTION
1990 STATE ROAD 19
TAVARES, FL

03.25.2024
date

24007
comm. no.

INDEX, VICINITY MAP AND NOTES

A0

SECTION 01330 - SUBMITTALS

PART 1 - GENERAL

1.1 SUMMARY
A. SECTION INCLUDES:
1. SUBMITTAL PROCEDURES PRIOR TO AND DURING CONSTRUCTION.

1.2 PROCESS AND RESPONSIBILITIES
A. CONTRACTOR RESPONSIBILITIES:
1. SUBMIT REQUIRED SUBMITTALS TO ARCHITECT UNLESS OTHERWISE SPECIFIED.
2. ELECTRONIC SUBMITTALS SHALL BE PROCESSED THROUGH EMAIL OF A WEB-BASED PROJECT MANAGEMENT PROGRAM.
3. COMPLY WITH SUBMITTAL REQUIREMENTS DEFINED WITHIN INDIVIDUAL SECTIONS. SUBMITTALS PROCEDURES DESCRIBED HEREIN SHALL APPLY UNLESS OTHERWISE STATED IN INDIVIDUAL SECTIONS.
4. PACKAGE EACH SUBMITTAL APPROPRIATELY FOR TRANSMITTAL AND HANDLING.
5. IDENTIFY PROJECT, CONTRACTOR, SUBCONTRACTOR OR SUPPLIER, PRODUCT OR ITEMS BEING SUBMITTED, PERTINENT DRAWING SHEET AND DETAIL NUMBERS, AND SPECIFICATION SECTION NUMBER, AS APPLICABLE.
6. ASSEMBLE, COORDINATE, AND REVIEW SUBMITTALS OF SUBCONTRACTORS, SUPPLIERS, AND MANUFACTURERS.
7. REVIEW SUBMITTAL FOR VERIFICATION OF PRODUCTS REQUIRED, FIELD DIMENSIONS, ADJACENT CONSTRUCTION, AND COORDINATION OF INFORMATION.
8. APPLY CONTRACTOR'S SUBMITTAL REVIEW STAMP, SIGNED OR INITIALED AND DATED, CERTIFYING COMPLIANCE WITH CONTRACT DOCUMENTS.
9. NUMBER SUBMITTALS SEQUENTIALLY USING A 3-DIGIT FORMAT BEGINNING WITH "001."
10. ELECTRONIC SUBMITTALS SHALL BE IN A SINGLE MULTI-PAGE .PDF FILE.
11. IDENTIFY EMAIL TRANSMITTAL OF SUBMITTALS IN THE SUBJECT LINE AS FOLLOWS:
a. PROJECT NAME, SUBMITTAL NAME (E.G. CONCRETE MIX DESIGN, SIEVE ANALYSIS, ETC), DATE OF SUBMITTAL
12. SCHEDULE SUBMITTALS TO EXPEDITE THE WORK. COORDINATE SUBMISSION OF RELATED ITEMS INTO SINGLE SUBMITTAL.
13. SUBMIT SUBMITTALS ITEMS REQUIRED WITHIN AN INDIVIDUAL SPECIFICATION SECTION INTO A SINGLE SUBMITTAL.
14. IDENTIFY VARIATIONS FROM CONTRACT DOCUMENTS AND LIMITATIONS OF PRODUCT AND SYSTEM WHICH MAY BE DETRIMENTAL TO SUCCESSFUL PERFORMANCE OF THE COMPLETED WORK.
15. PROVIDE SPACE ON SUBMITTAL FOR CONTRACTOR, ARCHITECT, AND ARCHITECT'S CONSULTANTS REVIEW STAMPS.
16. ALLOW TEN (10) WORKING DAYS FOR REVIEW.
17. REVISE AND RESUBMIT SUBMITTALS WHEN REQUIRED. IDENTIFY CHANGES MADE SINCE PREVIOUS SUBMITTAL.
18. NOTIFY VENDOR OR SUBCONTRACTOR OF APPROVAL BY AUTHORITY HAVING JURISDICTION OF DEFERRED SUBMITTAL PACKAGE.
19. DISTRIBUTE COPIES OF REVIEWED SUBMITTALS TO CONCERNED PARTIES AND TO RECORD DOCUMENTS FILE. INSTRUCT PARTIES TO PROMPTLY REPORT INABILITY TO COMPLY WITH PROVISIONS.

B. ARCHITECT RESPONSIBILITIES: REVIEW SUBMITTALS AND TAKE APPROPRIATE ACTION AS FOLLOWS.
1. SHOP DRAWINGS AND PRODUCT DATA: ARCHITECT WILL MARK SUBMITTALS TO INDICATE APPROPRIATE ACTION.
2. RETURN REVIEWED SUBMITTALS TO CONTRACTOR.
3. SUBMITTALS FOR INFORMATION: ARCHITECT WILL NOT RETURN SUBMITTALS SENT FOR INFORMATION ONLY.
4. FORWARD SUBMITTALS TO PROPER SUB-CONSULTANT FOR REVIEW AS NECESSARY.

C. UN-REQUESTED SUBMITTALS: SUBMITTALS TRANSMITTED TO ARCHITECT OR ARCHITECT'S CONSULTANTS THAT ARE NOT INDICATED OR REQUESTED WILL NOT BE REVIEWED. ARCHITECT WILL DISPOSE OF UN-REQUESTED SUBMITTAL ITEMS.

1.3 TRANSMITTAL
A. TRANSMIT EACH SUBMITTAL USING A TRANSMITTAL FORM. SUBMIT TO ARCHITECT UNLESS INDICATED OTHERWISE.
B. IN ADDITION TO RECIPIENTS STATED ABOVE, TRANSMIT SUBMITTALS TO THOSE PARTIES AS MAY BE REQUIRED IN THE INDIVIDUAL SPECIFICATION SECTION.

1.4 DEFERRED SUBMITTALS
A. DEFINITION: DEFERRED SUBMITTAL ARE SUBMITTALS REQUIRED BY THE AHJ FOR CODE COMPLIANCE BUT WHICH, RATHER THAN BEING SUBMITTED AT THE TIME OF PERMIT APPLICATION, HAVE BEEN ALLOWED BY THE AHJ TO BE DEFERRED UNTIL AFTER CONTRACT AWARD TO ENABLE THE SUCCESSFUL CONTRACTOR, SUBCONTRACTOR, OR SUPPLIER TO SUBMIT THE APPLICABLE SUBMITTALS.
B. PREPARE SUBMITTALS IN ACCORDANCE WITH REQUIREMENTS STATED IN THE APPLICABLE INDIVIDUAL SPECIFICATIONS SECTIONS AND THE APPLICABLE REQUIREMENTS HEREIN
C. PROCESS:
1. IMMEDIATELY AFTER AWARD OF THE CONTRACT, THE CONTRACTOR SHALL CONTACT THE AHJ TO COORDINATE AND DETERMINE THE AHJ REQUIREMENTS FOR DEFERRED SUBMITTALS. INFORMATION OBTAINED SHALL INCLUDE SUCH REQUIREMENTS AS NUMBER OF COPIES; EXTENT OF DETAIL OF INFORMATION TO BE SUBMITTED; REVIEW, IF REQUIRED, BY PROFESSIONAL OF RECORD (ARCHITECT OR ENGINEER); AND OTHER NECESSARY PROCESS AND PROCEDURAL REQUIREMENTS.
2. THE CONTRACTOR, OR OTHER ENTITY, RESPONSIBLE FOR THE SUBMITTAL SHALL SUBMIT, TRACK, AND REPORT SUBMITTAL STATUS THROUGH FINAL APPROVAL AND ISSUE OF PERMIT.
3. COMMUNICATE WITH VENDORS, SUPPLIERS, AND SUBCONTRACTORS THE AHJ REQUIREMENTS FOR DEFERRED SUBMITTALS. RECEIVE, REVIEW, AND STAMP SUBMITTALS IN ACCORDANCE WITH SUBMITTAL REQUIREMENTS HEREIN.
4. TRANSMIT DEFERRED SUBMITTALS DIRECTLY TO AHJ UNLESS OTHERWISE REQUESTED BY AHJ TO OBTAIN PRIOR REVIEW AND APPROVAL BY PROFESSIONAL OF RECORD.
5. UPON APPROVAL BY AHJ, OBTAIN PERMITS AND PAY PERMIT FEES AND OTHER FEES REQUIRED BY THE AHJ.
6. ATTACH APPROVED DEFERRED SUBMITTALS TO THE APPROVED "PERMIT SET" DOCUMENTS AT THE PROJECT SITE.
7. DO NOT INSTALL DEFERRED SUBMITTALS UNTIL CORRESPONDING SUBMITTAL DOCUMENTS HAVE BEEN APPROVED BY THE AHJ.]

1.5 SUBMITTAL REQUIREMENTS
A. SHOP DRAWINGS
1. SUBMIT DRAWINGS WITH GRAPHIC INFORMATION AT ACCURATE SCALE. SHOW DIMENSIONS AND NOTE WHICH DIMENSIONS ARE BASED ON FIELD MEASUREMENT. IDENTIFY MATERIALS AND PRODUCTS IN WORK SHOWN. INDICATE COMPLIANCE WITH SPECIFIED STANDARDS AND SPECIAL COORDINATION REQUIREMENTS. DO NOT USE REPRODUCTIONS OF CONTRACT DRAWINGS AS SHOP DRAWINGS.
2. INCLUDE ON EACH SHOP DRAWING THE DRAWING TITLE, NUMBER, ORIGINAL ISSUE DATE, AND REVISION NUMBERS AND DATES, IN ADDITION TO OTHER REQUIRED IDENTIFYING INFORMATION.
3. IDENTIFY DETAILS BY REFERENCE TO SHEET, DETAIL, SCHEDULE, OR ROOM NAMES SHOWN ON THE CONTRACT DRAWINGS.
4. IDENTIFY NUMERICAL VALUES IN ENGLISH UNITS.
5. SIZE: NOT LESS THAN 8-1/2 BY 11 INCHES NOR MORE THAN 30 BY 42 INCHES.
6. NUMBER OF COPIES REQUIRED:
a. FOR NON-MATERIAL SUBMITTALS, SUBMIT ONE ELECTRONIC FILE IN ADOBE .PDF FORMAT WITHOUT RESTRICTIONS TO PRINT AND/OR COMMENT ELECTRONICALLY.
b. FOR MATERIAL OR COLOR SELECTIONS, SUBMIT ONE COPY FOR REVIEW. UPON APPROVAL, PROVIDE ONE EACH FOR THE CONTRACTOR'S AND ONE FOR THE OWNER'S RECORDS.

B. PRODUCT DATA
1. MANUFACTURER'S STANDARD SCHEMATIC DRAWINGS AND DIAGRAMS:
a. CLEARLY MARK TO IDENTIFY PERTINENT PRODUCTS.
b. SHOW PERFORMANCE CHARACTERISTICS AND CAPACITIES.
c. SHOW DIMENSIONS AND CLEARANCES REQUIRED.
d. SHOW WIRING OR PIPING DIAGRAMS AND CONTROLS.
e. MODIFY DRAWINGS AND DIAGRAMS TO DELETE INFORMATION NOT APPLICABLE TO THIS WORK.
f. SUPPLEMENT STANDARD DRAWINGS AND DIAGRAMS TO PROVIDE COMPLETE INFORMATION APPLICABLE TO THIS WORK.
2. MARK EACH COPY TO IDENTIFY APPLICABLE PRODUCTS, MODELS, OPTIONS, AND OTHER DATA. SUPPLEMENT PRODUCT DATA WITH MATERIAL PREPARED FOR THE WORK TO SATISFY SUBMITTAL REQUIREMENTS FOR WHICH PRODUCT DATA DOES NOT EXIST. NOTE THAT THE MATERIAL IS DEVELOPED SPECIFICALLY FOR THIS CONTRACT.
3. SUBMIT PRODUCT DATA FOR EACH SECTION AS A COMPLETE, BOUND VOLUME. INCLUDE TABLE OF CONTENTS LISTING PAGE AND CATALOG ITEM NUMBERS FOR PRODUCT DATA.
4. INDICATE, BY PROMINENT CONTRASTING COLOR NOTATION ON EACH PRODUCT BEING SUBMITTED, THE SPECIFICATIONS SECTION AND PARAGRAPH NUMBERS TO WHICH IT PERTAINS.
5. WHERE PRINTED PRODUCT DATA INCLUDES INFORMATION ON SEVERAL PRODUCTS, SOME OF WHICH ARE NOT REQUIRED, MARK COPIES TO INDICATE INFORMATION APPLICABLE TO WORK AND CLEARLY CROSS OUT OTHER INFORMATION NOT APPLICABLE TO WORK. INCLUDE THE FOLLOWING INFORMATION:
a. MANUFACTURER'S PRINTED RECOMMENDATIONS OR INSTRUCTIONS.
b. COMPLIANCE WITH REFERENCED STANDARDS.
c. APPLICATION OF TESTING AGENCY LABELS AND SEALS.
d. NOTATION OF DIMENSIONS VERIFIED BY FIELD MEASUREMENT.
e. NOTATION OF COORDINATION REQUIREMENTS.
6. PRODUCT DATA FOR INFORMATION: WRITTEN INFORMATION NOT REQUIRING ACTION BY OWNER OR ARCHITECT; FOR VERIFICATION OF COMPLIANCE WITH REQUIREMENT. SUBMITTAL NOT COMPLYING WITH REQUIREMENTS WILL BE REJECTED.
7. NUMBER OF COPIES REQUIRED: FOUR.

C. ENGINEERING CALCULATIONS
1. SUBMIT CALCULATIONS SIGNED AND SEALED BY A REGISTERED PROFESSIONAL ENGINEER LICENSED IN THE STATE WHERE PROJECT IS LOCATED. COMPLY WITH REQUIREMENTS OF AUTHORITY HAVING JURISDICTION WITH REGARD TO SIGNING AND SEALING OF SUBMITTALS.

D. CERTIFICATIONS
1. CERTIFY MANUFACTURER'S OR INSTALLER'S QUALIFICATIONS, COMPLIANCE WITH TESTS OR SPECIFIED CRITERIA, OR OTHER FACTORS AS REQUIRED IN INDIVIDUAL SPECIFICATION SECTIONS.
2. SUBMIT SUPPORTING REFERENCE DATA, AFFIDAVITS, AND CERTIFICATIONS AS REQUIRED.

PART 2 - PRODUCTS
A. NOT USED.

PART 3 - EXECUTION
A. NOT USED.

END OF SECTION 01330

SECTION 02361 - TERMITE PROTECTION

PART 1 - GENERAL

1.1 SECTION REQUIREMENTS
A. SUBMITTALS: PRODUCT DATA AND PRODUCT CERTIFICATES SIGNED BY MANUFACTURER CERTIFYING THAT PRODUCTS USED COMPLY WITH U.S. EPA REGULATIONS FOR TERMITICIDES. INCLUDE APPLICATION INSTRUCTIONS AND A EPA-REGISTERED LABEL.
B. ENGAGE A LICENSED PROFESSIONAL PEST CONTROL OPERATOR TO APPLY TERMITE CONTROL SOLUTION.

PART 2 - PRODUCTS

2.1 TERMITICIDES
A. PROVIDE AN EPA-REGISTERED TERMITICIDE COMPLYING WITH REQUIREMENTS OF AUTHORITIES HAVING JURISDICTION, IN A SOLUABLE OR EMULSIBLE, CONCENTRATED FORMULATION THAT DILUTES WITH WATER OR FOAMING AGENT. USE ONLY SOIL TREATMENT SOLUTIONS THAT ARE NOT HARMFUL TO PLANTS. PROVIDE QUANTITY REQUIRED FOR APPLICATION AT THE LABEL VOLUME AND RATE FOR THE MAXIMUM TERMITICIDE CONCENTRATION ALLOWED FOR EACH SPECIFIC USE, ACCORDING TO THE PRODUCT'S EPA-REGISTERED LABEL.

PART 3 - EXECUTION

3.1 INSTALLATION
A. PREPARE SURFACES AND APPLY TREATMENT AT RATES AND CONCENTRATIONS RECOMMENDED IN MANUFACTURER'S WRITTEN INSTRUCTIONS.
B. APPLY TERMITE CONTROL TO THE FOLLOWING:
1. AT FOUNDATIONS.
2. UNDER CONCRETE FLOOR SLABS ON GRADE.
3. AT HOLLOW MASONRY.
4. AT EXPANSION AND CONTROL JOINTS AND SLAB PENETRATIONS.
5. TREAT ADJACENT AREAS INCLUDING AROUND ENTRANCE PLATFORM AND EQUIPMENT BASES. APPLY OVERALL TREATMENT ONLY WHERE ATTACHED CONCRETE PLATFORM ARE ON FILL OR GROUND.
C. POST WARNING SIGNS IN AREAS OF APPLICATION.
D. REAPPLY SOIL TERMITICIDE TREATMENT SOLUTION TO AREAS DISTURBED BY SUBSEQUENT EXCAVATION OR OTHER CONSTRUCTION ACTIVITIES FOLLOWING APPLICATION.

END OF SECTION 02361

SECTION 02751 - CONCRETE PAVEMENT

PART 1 - GENERAL

1.1 SECTION REQUIREMENTS
A. SUBMITTALS: PRODUCT DATA, DESIGN MIXES FOR CONCRETE, LABORATORY TEST REPORTS.
B. COMPLY WITH ACI 301, "SPECIFICATION FOR STRUCTURAL CONCRETE."

PART 2 - PRODUCTS

2.1 MATERIALS
A. REINFORCING BARS: ASTM A 615/A 615M, GRADE 60 (GRADE 420), DEFORMED.
B. WELDED STEEL WIRE FABRIC: ASTM A 185, FLAT SHEETS NOT ROLLS.
C. AIR-ENTRAINING ADMIXTURE: ASTM C 260.
D. CHEMICAL ADMIXTURES: ASTM C 494. CALCIUM CHLORIDE SHALL NOT BE USED.
E. LIQUID MEMBRANE-FORMING CURING COMPOUND: ASTM C 309, CLEAR, TYPE I, CLASS B, WATERBORNE.
F. PAVEMENT-MARKING PAINT: FS TT-P-1952, LATEX, WATER-BASE EMULSION.

2.2 MIXES
A. PROPORTION NORMAL-WEIGHT CONCRETE MIXES TO PROVIDE THE FOLLOWING PROPERTIES:
1. COMPRESSIVE STRENGTH: 3000 PSI (20.7 MPA) AT 28 DAYS.
2. SLUMP LIMIT: 4 INCHES (100 MM) AT POINT OF PLACEMENT.
3. W/C RATIO: 0.45 MAXIMUM AT POINT OF PLACEMENT.
4. AIR CONTENT: 5.5 TO 7.0 PERCENT.

PART 3 - EXECUTION

3.1 PAVING
A. ACCURATELY POSITION AND SUPPORT REINFORCEMENT, AND SECURE AGAINST DISPLACEMENT.
B. LOCATE AND INSTALL CONTRACTION, CONSTRUCTION, ISOLATION, AND EXPANSION JOINTS AS INDICATED OR REQUIRED.
C. PLACE CONCRETE IN A CONTINUOUS OPERATION WITHIN PLANNED JOINTS OR SECTIONS. DO NOT ADD WATER TO ADJUST SLUMP.
D. FLOAT SURFACES TO TRUE PLANES WITHIN A TOLERANCE OF 1/4 INCH IN 10 FEET (1:480) AND MEDIUM-TO-COARSE-TEXTURED BROOM FINISH.
E. TOOL EDGES AND JOINTS TO A RADIUS OF 3/8 INCH (9.5 MM).
F. BEGIN CURING AFTER FINISHING CONCRETE. APPLY MEMBRANE-FORMING CURING COMPOUND TO CONCRETE.
G. APPLY TRAFFIC PAINT WITH MECHANICAL EQUIPMENT TO A MINIMUM WET FILM THICKNESS OF 15 MILS (0.4 MM).
H. OWNER WILL EMPLOY A TESTING AGENCY TO SAMPLE CONCRETE, PERFORM TESTS, AND SUBMIT TEST REPORTS DURING CONCRETE PLACEMENT.
I. GENERAL CONTRACTOR AND REPLACE CONCRETE PAVING THAT IS BROKEN, DAMAGED, OR DEFECTIVE. EXCLUDE TRAFFIC FROM PAVING FOR AT LEAST 14 DAYS.

END OF SECTION 02751

SECTION 04710 - THIN BRICK MASONRY

PART 1 - GENERAL

1.1 SUMMARY
A. SCOPE OF WORK - PROVIDE THIN BRICK MASONRY VENEER, VENEER INSTALLATION MATERIALS AND ACCESSORIES AS INDICATED ON DRAWINGS, AS SPECIFIED HEREIN, AND AS NEEDED FOR COMPLETE AND PROPER INSTALLATION.
B. RELATED DOCUMENTS - PROVISIONS WITHIN GENERAL AND SUPPLEMENTARY GENERAL CONDITIONS OF THE CONTRACT

1.2 SECTION INCLUDES
A. THIN BRICK MASONRY VENEER UNITS
B. INSTALLATION PRODUCTS; ADHESIVES, MORTARS, POINTING MORTARS, AND SEALANTS
C. AIR BARRIER AND WATERPROOFING MEMBRANES
D. ANTI-FRACTURE MEMBRANES

1.3 REFERENCE STANDARDS
A. AMERICAN SOCIETY FOR TESTING AND MATERIALS (ASTM) C91 STANDARD SPECIFICATION FOR MASONRY CEMENT
B. AMERICAN SOCIETY FOR TESTING AND MATERIALS (ASTM) C109 STANDARD TEST METHOD FOR COMPRESSIVE STRENGTH OF HYDRAULIC CEMENT MORTARS (USING 2-IN. OR 50-MM CUBE SPECIMENS)
C. AMERICAN SOCIETY FOR TESTING AND MATERIALS (ASTM) C144 STANDARD SPECIFICATION FOR AGGREGATE FOR MASONRY MORTAR
D. AMERICAN SOCIETY FOR TESTING AND MATERIALS (ASTM) C150 STANDARD SPECIFICATION FOR PORTLAND CEMENT
E. AMERICAN SOCIETY FOR TESTING AND MATERIALS (ASTM) C270 STANDARD SPECIFICATION FOR MORTAR FOR UNIT MASONRY
F. AMERICAN SOCIETY FOR TESTING AND MATERIALS (ASTM) C531 STANDARD TEST METHOD FOR LINEAR SHRINKAGE AND COEFFICIENT OF THERMAL EXPANSION OF CHEMICAL-RESISTANT MORTARS, GROUTS, MONOLITHIC SURFACINGS AND POLYMER CONCRETES
G. AMERICAN SOCIETY FOR TESTING AND MATERIALS (ASTM) C847 STANDARD SPECIFICATION FOR METAL LATH
H. AMERICAN SOCIETY FOR TESTING AND MATERIALS (ASTM) C905 STANDARD TEST METHOD FOR APPARENT DENSITY OF CHEMICAL-RESISTANT MORTARS, GROUTS, AND MONOLITHIC SURFACINGS
I. AMERICAN SOCIETY FOR TESTING AND MATERIALS (ASTM) C920 STANDARD SPECIFICATION FOR ELASTOMERIC JOINT SEALANTS
J. AMERICAN SOCIETY FOR TESTING AND MATERIALS (ASTM) E84 STANDARD TEST METHOD FOR SURFACE BURNING CHARACTERISTICS OF BUILDING MATERIALS
K. AMERICAN SOCIETY FOR TESTING AND MATERIALS (ASTM) E96 STANDARD TEST METHODS FOR WATER VAPOR TRANSMISSION OF MATERIALS
L. MASONRY VENEER MANUFACTURERS ASSOCIATION (MVMA) INSTALLATION GUIDE FOR ADHERED CONCRETE MASONRY VENEER

1.4 SYSTEM DESCRIPTION
A. THIN ADHERED MASONRY VENEER INSTALLED USING LATEX-MODIFIED PORTLAND CEMENT MORTAR.

1.5 SUBMITTALS
A. SUBMIT SHOP DRAWINGS AND MANUFACTURERS' PRODUCT DATA.
B. SUBMIT SAMPLES OF EACH TYPE/STYLE/FINISH/SIZE/COLOR OF THIN ADHERED MASONRY.
C. SUBMIT MANUFACTURERS' INSTALLATION INSTRUCTIONS.
D. SUBMIT MANUFACTURER'S QUALIFICATIONS THAT THE MATERIALS SUPPLIED CONFORM TO RELEVANT STANDARDS.
E. SUBMIT PROOF OF WARRANTY.
F. SUBMIT SAMPLE OF INSTALLATION SYSTEM DEMONSTRATING COMPATIBILITY/FUNCTIONAL RELATIONSHIPS BETWEEN ADHESIVES, MORTARS, MEMBRANES AND OTHER COMPONENTS. SUBMIT PROOF FROM VENEER MANUFACTURER OR SUPPLIER VERIFYING SUITABILITY OF VENEER FOR SPECIFIC APPLICATION AND USE; INCLUDING DIMENSIONAL STABILITY, WATER ABSORPTION, FREEZE/THAW RESISTANCE (IF APPLICABLE), RESISTANCE TO THERMAL CYCLING, AND OTHER CHARACTERISTICS THAT THE MAY PROJECT MAY REQUIRE. THESE CHARACTERISTICS MUST BE REVIEWED AND APPROVED BY THE PROJECT DESIGN PROFESSIONAL(S).

1.6 QUALITY ASSURANCE
A. ADHERED MASONRY VENEER OR THIN BRICK MANUFACTURER (SINGLE SOURCE RESPONSIBILITY): COMPANY SPECIALIZING IN MANUFACTURED MASONRY VENEER OR THIN BRICK PRODUCTS WITH THREE (3) YEARS MINIMUM EXPERIENCE. OBTAIN VENEER UNITS FROM A SINGLE SOURCE WITH RESOURCES TO PROVIDE PRODUCTS OF CONSISTENT QUALITY IN APPEARANCE AND PHYSICAL PROPERTIES.
B. INSTALLATION SYSTEM MANUFACTURER (SINGLE SOURCE RESPONSIBILITY): COMPANY SPECIALIZING IN ADHESIVES, MORTARS, MEMBRANES AND OTHER INSTALLATION MATERIALS WITH TEN (10) YEARS MINIMUM EXPERIENCE AND ISO 9001-2008 CERTIFICATION. OBTAIN INSTALLATION MATERIALS FROM SINGLE SOURCE MANUFACTURER TO INSURE CONSISTENT QUALITY AND FULL COMPATIBILITY.
C. SUBMIT LABORATORY CONFIRMATION OF ADHESIVES, MORTARS, MEMBRANES AND OTHER INSTALLATION MATERIALS:
1. IDENTIFY PROPER USAGE OF SPECIFIED MATERIALS USING POSITIVE ANALYTICAL METHOD.
2. IDENTIFY COMPATIBILITY OF SPECIFIED MATERIALS USING POSITIVE ANALYTICAL METHOD.
3. IDENTIFY PROPER COLOR MATCHING OF SPECIFIED MATERIALS USING A POSITIVE ANALYTICAL METHOD.
D. INSTALLER QUALIFICATIONS: COMPANY SPECIALIZING IN INSTALLATION OF ADHERED MASONRY VENEER, THIN BRICK, AND/OR PAVERS WITH FIVE (5) YEARS DOCUMENTED EXPERIENCE WITH INSTALLATIONS OF SIMILAR SCOPE, MATERIALS AND DESIGN.

1.7 MOCK-UPS
A. PROVIDE MOCK-UP OF EACH TYPE/STYLE/FINISH/SIZE/COLOR OF ADHERED MASONRY VENEER, THIN BRICK, AND PAVERS ALONG WITH RESPECTIVE INSTALLATION ADHESIVES, MORTARS, POINTING MORTARS, MEMBRANES AND OTHER INSTALLATION MATERIALS, UNDER PROVISIONS OF SECTION (01 43 00) (01 45 00).
1. CONSTRUCT AREAS DESIGNATED BY ARCHITECT.
2. DO NOT PROCEED WITH REMAINING WORK UNTIL MATERIAL, DETAILS AND WORKMANSHIP ARE APPROVED BY ARCHITECT.
3. REFINISH MOCK-UP AREA AS REQUIRED TO PRODUCE ACCEPTABLE WORK.
4. AS APPROVED BY ARCHITECT, MOCK-UP MAY BE INCORPORATED INTO FINISHED WORK.

1.8 PRE-INSTALLATION CONFERENCE
A. PRE-INSTALLATION CONFERENCE: AT LEAST THREE WEEKS PRIOR TO COMMENCING THE WORK ATTEND A MEETING AT THE JOBSITE TO DISCUSS CONFORMANCE WITH REQUIREMENTS OF SPECIFICATION AND JOB SITE CONDITIONS. REPRESENTATIVES OF OWNER, ARCHITECT, GENERAL CONTRACTOR, SUBCONTRACTOR, ADHERED VENEER MANUFACTURER, INSTALLATION SYSTEM MANUFACTURER AND ANY OTHER PARTIES WHO ARE INVOLVED IN THE SCOPE OF THIS INSTALLATION MUST ATTEND THE MEETING.

1.9 DELIVERY, STORAGE AND HANDLING
A. ACCEPTANCE AT SITE: DELIVER AND STORE PACKAGED MATERIALS IN ORIGINAL CONTAINERS WITH SEALS UNBROKEN AND LABELS, INCLUDING GRADE SEAL, INTACT UNTIL TIME OF USE, IN ACCORDANCE WITH MANUFACTURER'S INSTRUCTIONS.
B. STORE INSTALLATION SYSTEM MATERIALS IN A DRY LOCATION; HANDLE IN A MANNER TO PREVENT CHIPPING, BREAKAGE, AND CONTAMINATION.
C. PROTECT LATEX ADDITIVES, ORGANIC ADHESIVES, EPOXY ADHESIVES AND SEALANTS FROM FREEZING OR OVERHEATING IN ACCORDANCE WITH MANUFACTURER'S INSTRUCTIONS; STORE AT ROOM TEMPERATURE WHEN POSSIBLE.
D. STORE PORTLAND CEMENT MORTARS IN A DRY LOCATION.

1.10 PROJECT/SITE CONDITIONS
A. PROVIDE VENTILATION AND PROTECTION OF ENVIRONMENT AS RECOMMENDED BY MANUFACTURER.
B. PREVENT CARBON DIOXIDE DAMAGE TO FINISHES AS WELL AS ADHESIVES, MORTARS, MEMBRANES AND OTHER INSTALLATION MATERIALS, BY VENTING TEMPORARY HEATERS TO THE EXTERIOR.
C. MAINTAIN AMBIENT TEMPERATURES NOT LESS THAN 40°F (10°C) OR MORE THAN 100°F (38°C) DURING INSTALLATION AND FOR A MINIMUM OF SEVEN (7) DAYS AFTER COMPLETION. SETTING OF PORTLAND CEMENT IS RETARDED BY LOW TEMPERATURES. PROTECT WORK FOR EXTENDED PERIOD OF TIME AND FROM DAMAGE BY OTHER TRADES. INSTALLATION WITH LATEX PORTLAND CEMENT MORTARS REQUIRES SUBSTRATE, AMBIENT AND MATERIAL TEMPERATURES AT LEAST 37°F (3°C). THERE SHOULD BE NO ICE IN SLAB. FREEZING AFTER INSTALLATION WILL NOT DAMAGE LATEX PORTLAND CEMENT MORTARS. PROTECT PORTLAND CEMENT BASED MORTARS FROM DIRECT SUNLIGHT, RADIANT HEAT, FORCED VENTILATION (HEAT & COLD) AND DRAFTS UNTIL CURED TO PREVENT PREMATURE EVAPORATION OF MOISTURE. EPOXY MORTARS REQUIRE SURFACE TEMPERATURES BETWEEN 60°F (16°C) AND 90°F (32°C) AT TIME OF INSTALLATION. IT IS THE GENERAL CONTRACTOR'S RESPONSIBILITY TO MAINTAIN TEMPERATURE CONTROL.

1.11 SEQUENCING AND SCHEDULING
A. COORDINATE INSTALLATION OF VENEER WORK WITH RELATED WORK.
B. PROCEED WITH VENEER WORK ONLY AFTER VENTS, DRAINS, PIPING, AND OTHER PROJECTIONS THROUGH SUBSTRATE HAVE BEEN INSTALLED AND WHEN SUBSTRATE CONSTRUCTION AND FRAMING OF OPENINGS HAVE BEEN COMPLETED.

1.12 WARRANTY
A. THE CONTRACTOR WARRANTS THE WORK OF THIS SECTION TO BE IN ACCORDANCE WITH THE CONTRACT DOCUMENTS AND FREE FROM FAULTS AND DEFECTS IN MATERIALS AND WORKMANSHIP FOR A PERIOD OF 15 YEARS. THE MANUFACTURER OF ADHESIVES, MORTARS, POINTING MORTARS, MEMBRANES AND OTHER INSTALLATION MATERIALS SHALL PROVIDE A WRITTEN FIFTEEN (15) YEAR WARRANTY. REFERENCE LATICRETE WARRANTY DATA SHEET 230.15SPD FOR COMPLETE DETAILS AND REQUIREMENTS.

1.13 MAINTENANCE
A. SUBMIT MAINTENANCE DATA UNDER PROVISIONS OF SECTION (01 78 00) (01 93 00). INCLUDE CLEANING METHODS, CLEANING SOLUTIONS RECOMMENDED AND STAIN REMOVAL METHODS RECOMMENDED.

PART 2 - PRODUCTS

2.1 THIN BRICK MATERIALS
A. THIN BRICK: ASTM C 216, GRADE SW, TYPE FBS.
1. SIZE: MODULAR, 1/2" X 2 1/4" X 7 5/8"
2. SOLID BRICK WITH EXPOSED SURFACES FINISHED FOR ENDS OF SILLS AND CAPS.
3. SPECIAL SHAPES FOR APPLICATIONS WHERE SHAPES PRODUCED BY SAWING WOULD RESULT IN SAWED SURFACES BEING EXPOSED TO VIEW.
B. MANUFACTURER, STYLE AND COLOR
1. AS INDICATED ON DRAWINGS.

2.2 VENEER INSTALLATION MATERIALS MANUFACTURER
A. LATICRETE INTERNATIONAL, INC., 1 LATICRETE PARK NORTH, BETHANY, CT 06524-3423 USA PHONE 800-243-4788, (203) 393-0010 TECHNICALSERVICES@LATICRETE.COM, HTTP://WWW.LATICRETE.COM/MVIS; WWW.LATICRETE.COM/GREEN
1. AIR BARRIER AND WATERPROOFING MEMBRANE: LATICRETE AIR & WATER BARRIER** AS MANUFACTURED BY LATICRETE INTERNATIONAL, INC.
2. LATEX PORTLAND CEMENT THIN BED MORTAR: LATICRETE THIN BRICK MORTAR AS MANUFACTURED BY LATICRETE INTERNATIONAL, INC.
3. LATEX PORTLAND CEMENT POINTING MORTAR: LATICRETE MASONRY POINTING MORTAR AS MANUFACTURED BY LATICRETE INTERNATIONAL, INC.
4. EXPANSION AND CONTROL JOINT SEALANT: LATICRETE LATASIL AS MANUFACTURED BY LATICRETE INTERNATIONAL, INC.

2.3 INSTALLATION ACCESSORIES
A. INSTALLATION ACCESSORIES AS MANUFACTURED BY LATICRETE INTERNATIONAL, INC., 1 LATICRETE PARK NORTH, BETHANY, CT 06524-3423 USA. PHONE 800-243-4788, WWW.LATICRETE.COM

END OF SECTION 04710

SECTION 04812 THIN BRICK VENEER

PART 1 - GENERAL

1.01 SUMMARY
A. SECTION INCLUDES: THIN BRICK VENEER

1.02 REFERENCES
A. AMERICAN CONCRETE INSTITUTE (ACI).
B. AMERICAN SOCIETY FOR TESTING AND MATERIALS (ASTM):
1. ASTM C 39, STANDARD TEST METHOD FOR COMPRESSIVE STRENGTH OF CYLINDRICAL CONCRETE SPECIMENS.
2. ASTM C 67, STANDARD TEST METHODS FOR SAMPLING AND TESTING BRICK AND STRUCTURAL CLAY TILE.
3. ASTM C 177, STANDARD TEST METHOD FOR STEADY-STATE HEAT FLUX MEASUREMENTS AND THERMAL TRANSMISSION PROPERTIES BY MEANS OF THE GUARDED-HOT-PLATE APPARATUS.
4. ASTM C 192, STANDARD PRACTICE FOR MAKING AND CURING CONCRETE TEST SPECIMENS IN THE LABORATORY.
5. ASTM C 270, STANDARD SPECIFICATION FOR MORTAR FOR UNIT MASONRY.
6. ASTM C 482, STANDARD TEST METHOD FOR BOND STRENGTH OF CERAMIC TILE TO PORTLAND CEMENT.
7. ASTM D 226, STANDARD SPECIFICATION FOR ASPHALT-SATURATED ORGANIC FELT USED IN ROOFING AND WATERPROOFING.
8. ASTM E 2556/ E 2556M STANDARD SPECIFICATION FOR VAPOR PERMEABLE FLEXIBLE SHEET WATER RESISTIVE BARRIERS INTENDED FOR MECHANICAL ATTACHMENT.

1.03 SUBMITTALS
A. SUBMIT FOLLOWING ITEMS:
B. PRODUCT DATA: THIN BRICK AND APPLICATION MATERIALS INCLUDING MORTAR COLOR CHARTS, AND WATER RESISTIVE BARRIER.
C. SAMPLES: PANEL CONTAINING FULL-SIZE SAMPLES OF SPECIFIED MANUFACTURED MASONRY SHOWING FULL RANGE OF COLORS AND TEXTURES COMPLETE WITH SPECIFIED MORTAR.
1. ACTUAL SIZE OF MASONRY SAMPLE APPROXIMATELY 12 BY 12 INCHES (300 BY 300 MM).
D. QUALITY ASSURANCE/CONTROL SUBMITTALS:
1. QUALIFICATIONS:
a. PROOF OF MANUFACTURER QUALIFICATIONS.
b. PROOF OF INSTALLER QUALIFICATIONS.
2. CERTIFICATES: ICC-ES REPORT.
3. TEST REPORTS FOR PHYSICAL PROPERTIES.
4. MANUFACTURER'S INSTALLATION INSTRUCTIONS.
5. FLORIDA PRODUCT APPROVAL NUMBER.
E. FIELD SAMPLES: PROVIDE IN A LOCATION SELECTED BY OWNER SHOWING REPRESENTATIVE SAMPLE OF INSTALLED PRODUCT INCLUDING PENETRATION AND TERMINATION DETAILS, CORNER DETAIL, AND MORTAR COLOR AND TOOLING.
1. MINIMUM SIZE: 4 BY 4 FEET.
2. APPROVED FIELD SAMPLES MAY REMAIN AS PART OF COMPLETED WORK.

1.04 DELIVERY, STORAGE, AND HANDLING
A. FOLLOW MANUFACTURER'S INSTRUCTIONS.
B. STORE MOISTURE-SENSITIVE MATERIALS IN WEATHER PROTECTED ENCLOSURES.

1.05 PROJECT/SITE CONDITIONS
A. ENVIRONMENTAL REQUIREMENTS: MAINTAIN MATERIALS AND AMBIENT TEMPERATURE IN AREA OF INSTALLATION AT MINIMUM 40 DEGREES F (4 DEGREES C) PRIOR TO, DURING, AND FOR 48 HOURS FOLLOWING INSTALLATION.

1.06 WARRANTY
A. SPECIAL WARRANTY: PROVIDE MANUFACTURER'S STANDARD LIMITED WARRANTY AGAINST DEFECTS IN MANUFACTURING FOR A PERIOD OF 50 YEARS FOLLOWING DATE OF SUBSTANTIAL COMPLETION.

1.07 MAINTENANCE
A. EXTRA MATERIALS: FURNISH EXTRA MANUFACTURED STONE MATERIAL IN A VARIETY OF SHAPES AND SIZES IN QUANTITY EQUAL TO THREE PERCENT OF THE INSTALLED STONE.

PART 2 - PRODUCTS

2.01 MANUFACTURER
A. THIN BRICK: ASTM C 216, GRADE SW, TYPE FBS.
1. SIZE: MODULAR, 1/2" X 2 1/4" X 7 5/8"
2. SOLID BRICK WITH EXPOSED SURFACES FINISHED FOR ENDS OF SILLS AND CAPS.
3. SPECIAL SHAPES FOR APPLICATIONS WHERE SHAPES PRODUCED BY SAWING WOULD RESULT IN SAWED SURFACES BEING EXPOSED TO VIEW.
B. MANUFACTURER, STYLE AND COLOR
1. AS INDICATED ON DRAWINGS.

2.02 RELATED MATERIALS
A. LATICRETE INTERNATIONAL, INC., 1 LATICRETE PARK NORTH, BETHANY, CT 06524-3423 USA PHONE 800-243-4788, (203) 393-0010 TECHNICALSERVICES@LATICRETE.COM, HTTP://WWW.LATICRETE.COM/MVIS; WWW.LATICRETE.COM/GREEN
1. AIR BARRIER AND WATERPROOFING MEMBRANE: LATICRETE AIR & WATER BARRIER AS MANUFACTURED BY LATICRETE INTERNATIONAL, INC.
2. LATEX PORTLAND CEMENT THIN BED MORTAR: LATICRETE THIN BRICK MORTAR AS MANUFACTURED BY LATICRETE INTERNATIONAL, INC.
A. COLOR: AS SELECTED BY ARCHTITECT
3. LATEX PORTLAND CEMENT POINTING MORTAR: LATICRETE MASONRY POINTING MORTAR AS MANUFACTURED BY LATICRETE INTERNATIONAL, INC.
A. COLOR: AS SELECTED BY ARCHITECT
4. EXPANSION AND CONTROL JOINT SEALANT: LATICRETE LATASIL AS MANUFACTURED BY LATICRETE INTERNATIONAL, INC.
A. COLOR: AS SELECTED BY ARCHITECT
B. METAL LATH: 2.5 LB (1.4 KG/M2) GALVANIZED EXPANDED METAL LATH.
C. FASTENERS:
1. INTO METAL STUDS: MINIMUM 7/16 INCH (11.1 MM) HEAD DIAMETER, CORROSION-RESISTANT, SELF-DRILLING, SELF TAPPING, PANCAKE HEAD SCREWS OF SUFFICIENT LENGTH TO PENETRATE 3/8 INCH (10 MM) MINIMUM INTO THE STUD.

2.03 WEEP SCREED AS REQUIRED FOR INSTALLATION OVER FRAMED CONSTRUCTION.

PART 3 - EXECUTION

3.01 EXAMINATION
A. EXAMINE SUBSTRATES UPON WHICH THIN BRICK WILL BE INSTALLED.
B. COORDINATE WITH RESPONSIBLE ENTITY TO CORRECT UNSATISFACTORY CONDITIONS.
C. COMMENCEMENT OF WORK BY INSTALLER IS ACCEPTANCE OF SUBSTRATE CONDITIONS.

3.02 PREPARATION
A. PROTECTION: PREVENT WORK FROM OCCURRING ON THE OPPOSITE OF WALLS TO WHICH THIN BRICK IS APPLIED DURING AND FOR 48 HOURS FOLLOWING INSTALLATION OF THE THIN BRICK.
B. SURFACE PREPARATION: FOLLOW MANUFACTURER'S INSTRUCTIONS DESIGNATED BELOW FOR THE APPROPRIATE TYPE OF MANUFACTURED MASONRY AND SUBSTRATE.

3.03 INSTALLATION
A. INSTALL THIN BRICK PRODUCTS IN ACCORDANCE WITH MANUFACTURER'S INSTALLATION INSTRUCTIONS
B. INSTALLATION INSTRUCTIONS USING GROUTED JOINTS.

3.04 CLEANING
A. CLEAN THIN BRICK IN ACCORDANCE WITH MANUFACTURER'S INSTALLATION INSTRUCTIONS.

3.05 PROTECTION
A. PROTECT FINISHED WORK FROM RAIN DURING AND FOR 48 HOURS FOLLOWING INSTALLATION.
B. PROTECT FINISHED WORK FROM DAMAGE DURING REMAINDER OF CONSTRUCTION PERIOD.

END OF SECTION 04812

SECTION 06100 - ROUGH CARPENTRY

PART 1 - GENERAL

1.1 SECTION REQUIREMENTS
A. SUBMITTALS: MODEL CODE EVALUATION REPORTS FOR ENGINEERED WOOD PRODUCTS, FOAM-PLASTIC SHEATHING, AND FIRE-RETARDANT-TREATED WOOD.

PART 2 - PRODUCTS

2.1 LUMBER, GENERAL
A. DRESSED LUMBER, S4S, 15 PERCENT MAXIMUM MOISTURE CONTENT FOR 2-INCH (38-MM) THICKNESS OR LESS, MARKED WITH GRADE STAMP OF INSPECTION AGENCY.

2.2 TREATED MATERIALS
A. PRESERVATIVE-TREATED MATERIALS: AWPA C2 LUMBER AND AWPA C9 PLYWOOD, LABELED BY AN INSPECTION AGENCY APPROVED BY ALSC'S BOARD OF REVIEW. AFTER TREATMENT, KILN-DRY LUMBER AND PLYWOOD TO 19 AND 15 PERCENT MOISTURE CONTENT, RESPECTIVELY. TREAT INDICATED ITEMS AND THE FOLLOWING:
1. WOOD MEMBERS IN CONNECTION WITH ROOFING, FLASHING, VAPOR BARRIERS, AND WATERPROOFING.
2. CONCEALED MEMBERS IN CONTACT WITH MASONRY OR CONCRETE.
3. WOOD FRAMING MEMBERS LESS THAN 18 INCHES (460 MM) ABOVE GRADE.
4. WOOD FLOOR PLATES INSTALLED OVER CONCRETE SLABS DIRECTLY IN CONTACT WITH EARTH.
B. FIRE-RETARDANT-TREATED MATERIALS: AWPA C20 LUMBER AND AWPA C27 PLYWOOD, INTERIOR TYPE A TREATMENT, LABELED BY A TESTING AND INSPECTING AGENCY ACCEPTABLE TO AUTHORITIES HAVING JURISDICTION.
1. USE TREATED LUMBER AND PLYWOOD WITH BENDING STRENGTH, STIFFNESS, AND FASTENER-HOLDING CAPACITIES THAT ARE NOT REDUCED BELOW VALUES PUBLISHED BY MANUFACTURER OF CHEMICAL FORMULATION UNDER ELEVATED TEMPERATURE AND HUMIDITY CONDITIONS.

2.3 LUMBER
A. DIMENSION LUMBER: THE FOLLOWING GRADES PER INSPECTION AGENCY INDICATED. SELECT ONE GRADE REQUIREMENT AND ONE OR MORE SPECIES GROUP IN SUBPARAGRAPHS BELOW FOR EACH APPLICATION DEPENDING ON AVAILABILITY AND SUITABILITY FOR PROJECT. DESIGNATE LOAD-BEARING WALLS ON DRAWINGS.
1. NON-LOAD-BEARING INTERIOR PARTITIONS: CONSTRUCTION, STUD, OR NO. 3.
2. FRAMING OTHER THAN NON-LOAD-BEARING PARTITIONS: CONSTRUCTION, STUD, OR NO. 3
B. CONCEALED BOARDS: 19 PERCENT MAXIMUM MOISTURE CONTENT: EASTERN SOFTWOODS: NO. 3 COMMON PER NELMA RULES.
C. MISCELLANEOUS LUMBER: NO. 3 OR STANDARD GRADE OF ANY SPECIES FOR NAILERS, BLOCKING, AND SIMILAR MEMBERS.

2.4 ENGINEERED WOOD PRODUCTS
A. ENGINEERED WOOD PRODUCTS ACCEPTABLE TO AUTHORITIES HAVING JURISDICTION AND WITH ALLOWABLE DESIGN STRESSES, AS PUBLISHED BY MANUFACTURER, THAT MEET OR EXCEED THOSE INDICATED. MANUFACTURER'S PUBLISHED VALUES SHALL BE DEMONSTRATED BY COMPREHENSIVE TESTING.
B. LAMINATED-VENEER LUMBER: LAMINATED WITH AN EXTERIOR-TYPE ADHESIVE COMPLYING WITH ASTM D 2559, WITH GRAIN OF VENEERS PARALLEL TO THEIR LENGTHS.
1. EXTREME FIBER STRESS IN BENDING: 2500 PSI (17 MPA) FOR 12-INCH NOMINAL- (286-MM ACTUAL-) DEPTH MEMBERS.
2. MODULUS OF ELASTICITY: 2,000,000 PSI (13 800 MPA). STRUCTURAL PROPERTIES FOR PRODUCT ABOVE AND BELOW ARE BASED ON PRODUCTS OF ONE MANUFACTURER. VERIFY ADEQUACY AND LOCAL AVAILABILITY BEFORE RETAINING. REVISE AS NEEDED.
C. PARALLEL-STRAND LUMBER: LAID UP FROM WOOD STRANDS WITH EXTERIOR-TYPE ADHESIVE COMPLYING WITH ASTM D 2559,WITH GRAIN OF STRANDS PARALLEL TO THEIR LENGTHS.
1. EXTREME FIBER STRESS IN BENDING: 2900 PSI (20 MPA) FOR 12-INCH NOMINAL- (286-MM ACTUAL-) DEPTH MEMBERS.
2. MODULUS OF ELASTICITY: 2,000,000 PSI (13 800 MPA).

2.5 PANEL PRODUCTS
A. WOOD-BASED STRUCTURAL-USE PANELS: DOC PS 2. PROVIDE PLYWOOD COMPLYING WITH DOC PS 1, WHERE PLYWOOD IS INDICATED.
1. FACTORY MARK PANELS EVIDENCING COMPLIANCE WITH GRADE REQUIREMENTS.
2. PROVIDE PANELS WITH SPAN RATINGS REQUIRED BY SUPPORT SPACING INDICATED.
3. WALL SHEATHING: APA-RATED STRUCTURAL I SHEATHING, EXPOSURE 1.
4. ROOF SHEATHING: APA-RATED STRUCTURAL I SHEATHING, EXTERIOR.

2.6 MISCELLANEOUS PRODUCTS
A. AIR-INFILTRATION BARRIER: ASTM D 226, TYPE I, NO. 15 ASPHALT FELT, UNPERFORATED OR POLYOLEFIN MATERIAL COMPLYING WITH ASTM E 1677, TYPE I, WITH MINIMUM WATER-VAPOR TRANSMISSION OF 10 PERMS (575 NG/PA X S X SQ. M).
B. FASTENERS: SIZE AND TYPE INDICATED. WHERE ROUGH CARPENTRY IS EXPOSED TO WEATHER, IN GROUND CONTACT, OR IN AREA OF HIGH RELATIVE HUMIDITY, PROVIDE FASTENERS WITH A HOT-DIP ZINC COATING PER ASTM A 153 OR OF TYPE 304 STAINLESS STEEL.
1. POWER-DRIVEN FASTENERS: CABO NER-272.
2. BOLTS: STEEL BOLTS COMPLYING WITH ASTM A 307, GRADE A (ASTM F 568, PROPERTY CLASS 4.6); WITH ASTM A 563 (ASTM A 563M) HEX NUTS AND, WHERE INDICATED, FLAT WASHERS.
C. METAL FRAMING ANCHORS: HOT-DIP GALVANIZED STEEL OF STRUCTURAL CAPACITY, TYPE, AND SIZE INDICATED.
D. SILL-SEALER: GLASS-FIBER INSULATION, 1-INCH (25-MM) THICK, COMPRESSIBLE TO 1/32 INCH (0.8 MM).
E. ADHESIVES FOR FIELD GLUING PANELS TO FRAMING: APA AFG-01.

PART 3 - EXECUTION

3.1 INSTALLATION
A. FIT ROUGH CARPENTRY TO OTHER CONSTRUCTION; SCRIBE AND COPE FOR ACCURATE FIT. CORRELATE LOCATION OF FURRING, BLOCKING, AND SIMILAR SUPPORTS TO ALLOW ATTACHMENT OF OTHER CONSTRUCTION.
B. SECURELY ATTACH ROUGH CARPENTRY WORK TO SUBSTRATE BY ANCHORING AND FASTENING AS INDICATED, COMPLYING WITH THE FOLLOWING:
1. CABO NER-272 FOR POWER-DRIVEN STAPLES, P-NAILS, AND ALLIED FASTENERS.
2. PUBLISHED REQUIREMENTS OF METAL FRAMING ANCHOR MANUFACTURER.

END OF SECTION 06100

SECTION 07110 - DAMPPROOFING

1.1 SECTION REQUIREMENTS
AT LOCATIONS BETWEEN BRICK VENEER OR MANUFACTURED STONE AND CMU CONSTRUCTION, THE FACE OF THE CMU SHALL BE PROVIDED WITH DAMPPROOFING APPLIED IN ACCORDANCE WITH MANUFACTURER'S RECOMMENDATIONS. DAMPPROOFING SHALL CONSIST OF A WATER EMULSION OF ASPHALT FORMULATED FOR SPRAYING OR BRUSHING, AND USE FOR ON GREEN OR SLIGHTLY DAMPENED WALLS. ACCEPTABLE PRODUCTS ARE:
1) KARNAK CHEMICAL CORP., KARNAK 100 AF NON-FIBERED EMULSION DAMPPROOFING
2) BASF BUILDING SYSTEMS, HYDROCIDE 700B
3) TEXMASTIC INTERNATIONAL, INC., TEXMASTIC SPRAY MASTIC #712-B
4) GRACE CONSTRUCTION PRODUCTS, GRACE PROCOR 75

END OF SECTION 07110

SECTION 07210 - BUILDING INSULATION

PART 1 - GENERAL

1.1 SECTION REQUIREMENTS
A. SUBMITTALS: PRODUCT DATA FOR EACH TYPE OF INSULATION PRODUCT SPECIFIED. MODIFY RATINGS IN PARAGRAPH BELOW TO SUIT AUTHORITIES HAVING JURISDICTION, INSULATION MATERIAL SELECTED, OR IF INSULATION MATERIALS WILL REMAIN EXPOSED.
B. SURFACE-BURNING CHARACTERISTICS: ASTM E 84, FLAME-SPREAD RATINGS OF 75 OR LESS AND SMOKE-DEVELOPED RATINGS OF 450 OR LESS.

PART 2 - PRODUCTS

2.1 INSULATION PRODUCTS
A. EXTRUDED-POLYSTYRENE BOARD INSULATION: ASTM C 578, TYPE [IV] [V] [VI] [VII] [X].
B. MOLDED-POLYSTYRENE BOARD INSULATION: ASTM C 578, TYPE [I] [II] [VIII].
C. POLYISOCYANURATE BOARD INSULATION: ASTM C 1289, TYPE I, CLASS 1 OR 2, FACED ON BOTH SIDES WITH ALUMINUM FOIL.
D. FLEXIBLE GLASS-FIBER-BOARD INSULATION: ASTM C 612, TYPE IA OR ASTM C 553, TYPES I, II, AND III; FOIL-SCRIM-KRAFT FACED; NOMINAL DENSITY OF 1.5 LB/CU. FT. (24 KG/CU. M).
E. GLASS-FIBER-BOARD INSULATION: ASTM C 612, TYPE IA OR TYPE IA AND IB; FOIL-SCRIM-KRAFT OR FOIL-SCRIM-POLYETHYLENE FACED; NOMINAL DENSITY OF 3 LB/CU. FT. (48 KG/CU. M).
F. MINERAL-FIBER-BLANKET INSULATION: ASTM C 665, TYPE III, CLASS A, FOIL-SCRIM-KRAFT, FOIL-SCRIM, OR FOIL-SCRIM-POLYETHYLENE VAPOR-RETARDER MEMBRANE ON ONE FACE WITH FIBERS MANUFACTURED FROM GLASS.

2.2 ACCESSORIES
A. VAPOR RETARDER: REINFORCED POLYETHYLENE OR FIRE-RETARDANT, REINFORCED POLYETHYLENE, MIN. 6 MILL THICK.
B. EAVE VENTILATION TROUGHS: PREFORMED, RIGID FIBERBOARD OR PLASTIC SHEETS DESIGNED TO FIT BETWEEN ROOF FRAMING MEMBERS AND TO PROVIDE CROSS-VENTILATION BETWEEN ATTIC SPACES AND VENTED EAVES.

PART 3 - EXECUTION

3.1 INSTALLATION
A. INSTALL INSULATION IN AREAS AND IN THICKNESSES INDICATED OR REQUIRED TO PRODUCE R-VALUES INDICATED. CUT AND FIT TIGHTLY AROUND OBSTRUCTIONS AND FILL VOIDS WITH INSULATION.
B. EXTEND VAPOR RETARDER TO EXTREMITIES OF AREAS TO BE PROTECTED FROM VAPOR TRANSMISSION. SECURE IN PLACE WITH ADHESIVES OR OTHER ANCHORAGE.

NOTE - AS AN ALTERNATE TO EXTRUDED POLYSTYRENE BOARD THE CONTRACTOR MAY USE INJECTED FOAM INSULATION AT ALL CMU CAVITIES NOT FILLED WITH CONCRETE. COMPLY WITH MANUFACTURER'S SPECIFICATION. BY: TAYLORED FOAM, CORE-FILL 500, OR EQUAL.

END OF SECTION 07210

SECTION 07242 - ROOF INSULATION

SEE SECTION 07500

SECTION 07271 SELF-ADHERING WATER RESTIVE BARRIER

PART 1 - GENERAL

1.01 GENERAL REQUIREMENTS
A. THIS SPECIFICATION SHALL BE READ AS A WHOLE BY ALL PARTIES CONCERNED. EACH SECTION MAY CONTAIN MORE OR LESS THE COMPLETE WORK OF ANY TRADE. THE CONTRACTOR IS SOLELY RESPONSIBLE TO MAKE CLEAR TO THE SUBCONTRACTORS THE EXTENT OF THEIR WORK AND COORDINATE OVERLAPPING WORK.

1.02 SYSTEM DESCRIPTION
A. SUPPLY LABOR, MATERIALS AND EQUIPMENT FOR A FULLY ADHERED WATER-RESISTIVE VAPOR PERMEABLE AIR BARRIER MEMBRANE SYSTEM.
B. COMPLETE WORK AS SHOWN ON THE DRAWINGS AND SPECIFIED HEREIN TO BRIDGE GAPS AND SEAL THE WATER-RESISTIVE VAPOR PERMEABLE AIR BARRIER MEMBRANE AGAINST AIR LEAKAGE AND WATER INTRUSION, INCLUDING:
1. CONNECTIONS OF THE WALLS TO THE ROOF MEMBRANE
2. CONNECTIONS OF THE WALLS TO THE FOUNDATIONS
3. SEISMIC AND EXPANSION JOINTS
4. OPENINGS AND PENETRATIONS OF WINDOW AND DOOR FRAMES, STORE FRONT, CURTAIN WALL
5. PIPING, CONDUIT, DUCT AND SIMILAR PENETRATIONS
6. MASONRY TIES, SCREWS, BOLTS AND SIMILAR PENETRATIONS
7. ALL OTHER AIR LEAKAGE PATHWAYS IN THE BUILDING ENVELOPE
C. INSTALL PRIMARY WATER-RESISTIVE VAPOR PERMEABLE AIR BARRIER, FLASHING, AND VENTILATION STRIP ACCESSORIES.

1.03 RELATED PRODUCTS MAY INCLUDE:
A. MASONRY VENEER
B. GYPSUM SHEATHING
C. PLYWOOD SHEATHING
D. INSULATION
E. ROOFING
F. WALL PANELS
G. FLASHING
H. SEALANTS
I. DOOR FRAMES
J. WINDOW FRAMES

1.04 REFERENCE STANDARDS
A. ASTM INTERNATIONAL (ASTM):
1. ASTM D 5034 - TEST METHOD FOR BREAKING STRENGTH AND ELONGATION OF TEXTILE FABRICS (GRAB TEST).
2. ASTM E 96/E 96M - TEST METHODS FOR WATER VAPOR TRANSMISSION OF MATERIALS.
3. ASTM E398 STANDARD TEST METHOD FOR WATER VAPOR TRANSMISSION RATE OF SHEET MATERIALS USING DYNAMIC RELATIVE HUMIDITY MEASUREMENT.
4. ASTM E 2178 - STANDARD TEST METHOD FOR AIR PERMEANCE OF BUILDING MATERIALS.
5. ASTM E 2357 - STANDARD TEST METHOD FOR DETERMINING AIR LEAKAGE OF AIR BARRIER ASSEMBLIES.
6. ASTM E 283 - STANDARD TEST METHOD FOR DETERMINING RATE OF AIR LEAKAGE THROUGH EXTERIOR WINDOWS, CURTAIN WALLS, AND DOORS UNDER SPECIFIED PRESSURE DIFFERENCES ACROSS THE SPECIMEN.
7. ASTM E 84 - TEST METHOD FOR SURFACE BURNING CHARACTERISTICS OF BUILDING MATERIALS.
B. AMERICAN ASSOCIATION OF TEXTILE CHEMISTS AND COLORISTS (AATCC): ATCC 127 - TEST METHOD FOR WATER RESISTANCE: HYDROSTATIC PRESSURE TEST.
C. INTERNATIONAL CODE COUNCIL EVALUATION SERVICE, INC. (ICC-ES): ICC-ES AC38 - ACCEPTANCE CRITERIA FOR WATER-RESISTIVE BARRIERS.

1.05 SUBMITTALS
A. SUBMIT MANUFACTURERS' CURRENT PRODUCT DATA SHEETS, DETAILS AND INSTALLATION INSTRUCTIONS FOR THE WATER-RESISTIVE VAPOR PERMEABLE AIR BARRIER MEMBRANE COMPONENTS AND ACCESSORIES.
B. SUBMIT SAMPLES OF THE FOLLOWING:
1. MANUFACTURER'S SAMPLE WARRANTY
2. WATER-RESISTIVE VAPOR PERMEABLE AIR BARRIER SHEET, MINIMUM 8 BY 10 INCHES (203 BY 254 MM)
3. COMPONENTS, MINIMUM 12 INCH (305 MM) LENGTHS
4. MEMBRANE FLASHINGS
5. FASTENERS, CLIPS, STRAPPING, CLADDING ATTACHMENT FASTENERS AND MASONRY TIES
6. SEALANTS

1.06 QUALITY ASSURANCE
A. SINGLE SOURCE: SELF-ADHERED WATER-RESISTIVE VAPOR PERMEABLE AIR BARRIER MEMBRANE COMPONENTS AND ACCESSORIES MUST BE OBTAINED AS A SINGLE-SOURCE MEMBRANE SYSTEM TO ENSURE TOTAL SYSTEM COMPATIBILITY AND INTEGRITY.
B. MANUFACTURER QUALIFICATIONS
1. MANUFACTURER OF SPECIFIED PRODUCTS LISTED IN THIS SECTION TO HAVE MINIMUM 10 YEARS OF CONTINUED EXPERIENCE IN THE MANUFACTURE AND SUPPLY OF HIGHLY VAPOR PERMEABLE WATER RESISTIVE AIR BARRIER PRODUCTS SUCCESSFULLY INSTALLED IN SIMILAR PROJECT APPLICATIONS.
2. MANUFACTURER OF SPECIFIED PRODUCTS LISTED IN THIS SECTION TO HAVE EXPERIENCED IN-HOUSE TECHNICAL AND FIELD OBSERVATION PERSONAL QUALIFIED TO PROVIDE EXPERT TECHNICAL SUPPORT.
C. FIRE PERFORMANCE CHARACTERISTICS: PROVIDE WATER-RESISTIVE BARRIER MEETING THE FOLLOWING FIRE-TEST CHARACTERISTICS.
1. SURFACE-BURNING CHARACTERISTICS: ASTM E 84
2. FLAME SPREAD INDEX: 5 OR LESS
3. SMOKE DEVELOPED INDEX: 15 OR LESS

1.07 DELIVERY, STORAGE AND HANDLING
A. REFER TO CURRENT PRODUCT INSTALLATION INSTRUCTIONS AND SDS AT WWW.VAPROSHIELD.COM FOR PROPER STORAGE AND HANDLING.

1.08 COORDINATION
A. ENSURE CONTINUITY OF THE FULLY SELF-ADHERED WATER-RESISTIVE VAPOR PERMEABLE AIR BARRIER SYSTEM THROUGHOUT THE SCOPE OF THIS SECTION.
1. AIR BARRIER VAPOR PERMEABLE MEMBRANE TO INCLUDE SELF-ADHERED AIR BARRIER, TRANSITION MEMBRANES AND SEALANTS AT PENETRATIONS.
2. DRAINAGE PLANE TO INCLUDE DRAINAGE CAVITY, WATER RESISTIVE BARRIER AND FLASHINGS TO THE EXTERIOR.

1.09 WARRANTY
A. PROVIDE MANUFACTURER'S STANDARD MATERIAL WARRANTY IN WHICH MANUFACTURER AGREES TO PROVIDE REPLACEMENT MATERIAL FOR THE FULLY SELF-ADHERED WATER-RESISTIVE VAPOR PERMEABLE AIR BARRIER SHEETS INSTALLED IN ACCORDANCE WITH MANUFACTURER'S INSTRUCTIONS THAT FAIL DUE TO MATERIAL DEFECTS WITHIN 20 YEARS OF THE DATE OF PURCHASE.

PART 2 - PRODUCTS

2.01 MATERIALS
A. PRIMARY FULLY SELF-ADHERED WATER-RESISTIVE VAPOR PERMEABLE AIR BARRIER MEMBRANE COMPONENTS AND ACCESSORIES MUST BE OBTAINED FROM A SINGLE-SOURCE MANUFACTURE TO ENSURE TOTAL SYSTEM COMPATIBILITY AND INTEGRITY.
1. SELF-ADHERED WATER-RESISTIVE VAPOR PERMEABLE AIR BARRIER MEMBRANE BY VAPROSHIELD LLC., GIG HARBOR, WA, PHONE: (866) 731-7663, WEBSITE: WWW.VAPROSHIELD.COM.
B. WATER-RESISTIVE VAPOR PERMEABLE SELF-ADHERED AIR BARRIER MATERIALS (BASIS OF DESIGN)
1. PRIMARY FULLY SELF-ADHERED AIR BARRIER SHEET MEMBRANE SHALL BE WRAPSHIELD SA© SELF-ADHERED WATER-RESISTIVE VAPOR PERMEABLE AIR BARRIER SHEET BY VAPROSHIELD, A ZERO VOC FULLY SELF-ADHERED VAPOR PERMEABLE AIR BARRIER SHEET MEMBRANE CONSISTING OF MULTIPLE LAYERS OF SPUN-BONDED POLYPROPYLENE TESTED IN ACCORDANCE WITH ICC-ES AC 38 CRITERIA TO MEET IBC AND IRC REQUIREMENTS FOR WEATHER RESISTIVE BARRIERS HAVING THE FOLLOWING PROPERTIES:
a. COLOR: ORANGE WITH ALLOWABLE UV EXPOSURE FOR 180 DAYS, PRIOR TO COVERAGE.
b. BREAKING STRENGTH AND ELONGATION TO ASTM D 5034: 88 LBF (391 N), MACHINE DIRECTION; 83 LBF (369 N), CROSS-MACHINE DIRECTION.
c. WATER VAPOR PERMEANCE TESTED TO ASTM E 96 METHOD B: MINIMUM OF 50 PERMS (2861 NG/PA.S.M2)
d. WATER VAPOR PERMEANCE TESTED TO ASTM E398: MINIMUM OF 50 PERMS (2861 NG/PA.S.M2)
e. AIR LEAKAGE: ≤0.00002 CFM/FT2 @ 1.57 PSF (≤0.0001 L/S M2 @ 75 PA) WHEN TESTED IN ACCORDANCE WITH ASTM E 2178 AND <0.01 CFM/FT2 @ 1.57 PSF (<0.01 L/S M2 @ 75 PA)) WHEN TESTED IN ACCORDANCE WITH ASTM E 2357 AND. MEETS AIR BARRIER ASSOCIATION OF AMERICA (ABAA) REQUIREMENTS FOR ©ADHESIVE BACKED COMMERCIAL BUILDING WRAPS".
f. WATER RESISTANCE TESTED TO AATCC 127, 550 MM HYDROSTATIC HEAD FOR 5 HOURS: NO LEAKAGE
g. APPLICATION TEMPERATURE: AMBIENT TEMPERATURE MUST BE ABOVE 20 °F (MINUS 6.7 °C)
h. SURFACE BURNING CHARACTERISTICS TESTED TO ASTM E 84: CLASS A, FLAME-SPREAD INDEX OF LESS THAN 5, SMOKE-DEVELOPED INDEX OF LESS THAN 15
i. PHYSICAL DIMENSIONS: 0.022 INCHES (0.56 MM) THICK AND 59 INCHES (1.5 M) WIDE AND 7.58 OZ/YD2 (257 G/M2).
C. WATER-RESISTIVE VAPOR PERMEABLE TRANSITION AND FLASHING MEMBRANE
1. SELF-ADHERED AIR BARRIER TRANSITION AND FLASHING MEMBRANE FOR ALL WINDOW JAMBS, HEADERS, DOOR OPENINGS, INSIDE AND OUTSIDE CORNERS, AND OTHER TRANSITIONS SHALL BE PRE-CUT VAPROFLASHING SA® BY VAPROSHIELD, A ZERO VOC FULLY SELF-ADHERED WATER-RESISTIVE VAPOR PERMEABLE SHEET MEMBRANE HAVING THE FOLLOWING PROPERTIES:
a. VAPROFLASHING SA® ORANGE: 6 ½ INCHES (17.8 CM), 11 3/4 INCHES (30 CM) OR 19 2/3 INCHES (50 CM) WIDE X 164 FEET (50 M) LONG
b. AIR LEAKAGE: ≤0.00002 CFM/FT2 @ 1.57 PSF (≤0.0001 L/S M2 @ 75 PA) WHEN TESTED IN ACCORDANCE WITH ASTM E 2178 AND <0.01 CFM/FT2 @ 1.57 PSF (<0.01 L/S M2 @ 75 PA)) WHEN TESTED IN ACCORDANCE WITH ASTM E 2357
WATER VAPOR PERMEANCE TESTED TO ASTM E 96 METHOD B: MINIMUM 50 PERMS (2861 NG/PA.S.M2)
WATER VAPOR PERMEANCE TESTED TO ASTM E398: MINIMUM OF 50 PERMS (2861 NG/PA.S.M2)
WATER RESISTANCE TESTED TO AATCC 127, 550 MM HYDROSTATIC HEAD FOR 5 HOURS: NO LEAKAGE
D. VAPROLIQUI-FLASH® VAPOR PERMEABLE WATER RESISTIVE FLASHING FOR ROUGH OPENINGS PART II OF II FLASHING SYSTEM
1. WINDOW AND DOOR PRE-CUT VAPROFLASHING SA® SHALL INCLUDE VAPROLIQUI-FLASH BY VAPROSHIELD, A LIQUID-APPLIED VAPOR PERMEABLE AIR BARRIER FLASHING MATERIAL WITH VAPOR PERMEANCE AND RESISTANCE TO AIR LEAKAGE PROPERTIES COMPATIBLE WITH THE PRIMARY AIR BARRIER MEMBRANE.
E. THROUGH WALL FLASHING
1. THRU-WALL FLASHING SHALL INCLUDE VAPRO-SS FLASHING® BY VAPROSHIELD, A FLEXIBLE 2 MIL (0.05 MM) STAINLESS STEEL SHEET WITH AN 8 MIL (0.20 MM) BUTYL ADHESIVE BACKING AND MAY INCLUDE A VAPROTERMINATION BAR® WHEN THE TOP SECTION OF THE VAPRO-SS FLASHING® IS EXPOSED.
a. VAPRO-SS FLASHING®: 4, 6, 9, 12, 18 OR 24 INCHES (10.2, 15.2, 22.9, 30.5, 45.7, 61 CM) X 50 FEET (15.24 M) LONG.
b. TENSILE STRENGTH/PUNCTURE: 100,000 PSI WHEN TESTED IN ACCORDANCE WITH ASTM D882 AND 2,500 PSI WHEN TESTED IN ACCORDANCE WITH ASTM E154
c. VAPROTERMINATION BAR®: 1 INCH (25 MM) WIDE X 8 FEET (2.4 M) LONG, UV-RESISTANCE RIGID THERMOPLASTIC EXTRUSION, IF REQUIRED BY SEQUENCE OF INSTALLATION.
F. WATER-RESISTIVE WEATHER BARRIER BATTEN, SHIM OR MAT ACCESSORIES OPTIONS
1. WATER-RESISTIVE WEATHER BARRIER BATTEN AND VENTILATION ACCESSORIES BY VAPROSHIELD SHALL BE MADE OF BLACK PVC MATERIAL.
a. VAPROBATTENTM BLACK VINYL EXTRUSION WITH PRE-FORMED MOISTURE DRAINAGE CHANNELS CONFIGURED TO CREATE A VENTILATED AIRSPACE BETWEEN WALL CLADDING AND WEATHER-RESISTIVE BARRIER, BULL NOSE EDGES PREVENT MEMBRANE TEARING. FASTENERS ARE INSTALLED DIRECTLY THROUGH VAPROBATTEN INTO THE STRUCTURAL ELEMENTS REGARDLESS OF WEATHER CONDITIONS.
b. VAPROVENT® STRIPS ARE AVAILABLE IN TWO TYPES: VAPROVENT L STRIP AND VAPROVENT HOOK STRIP.
i. VAPROVENT® GRAY VINYL L STRIPS ARE ATTACHED TO THE TOP AND BOTTOM OF VAPROBATTENS. THEY PREVENT INSECT INVASION AND PROVIDE MAXIMUM VENTILATION.
ii. VAPROVENT® GRAY VINYL HOOK STRIPS ARE USED WITH VAPROBATTENS AS A STARTER STRIP FOR VINYL AND BEVELED SIDING APPLICATIONS, IN PLACE OF THE VAPROVENT L STRIP AT THE BOTTOM OF THE ASSEMBLY.
c. VAPROSHIM SA® SELF-ADHERED, NEOPRENE/EPDM ACCESSORY USED UNDER HORIZONTAL OR VERTICAL CLADDING ATTACHMENT COMPONENTS TO CREATE A VERTICAL RAIN SCREEN DRAINAGE PLANE FOR CLADDING, WHILE SEALING FASTENER PENETRATIONS.
d. VAPROMAT® LIGHTWEIGHT, HYDROPHOBIC FILTER FABRIC WITH A 3 MM OR 7 MM POLYPROPYLENE DRAINAGE MATRIX ATTACHED, DESIGNED TO KEEP THE DRAINAGE CAVITY CLEAN AND UNOBSTRUCTED DURING THE LATH AND PLASTER OR ADHESIVE MORTAR INSTALLATION, PROMOTING RAPID DRAINING AND DRYING OF THE RAIN SCREEN CAVITY.

2.02 PENETRATION SEALANT
A. PROVIDE SEALANT FOR PENETRATIONS AS RECOMMENDED BY MANUFACTURER OR AS SPECIFIED UNDER DIVISION 07 SECTION: SEALANTS. APPROPRIATE SEALANTS SHALL BE VAPROBOND® OR VAPROLIQUI-FLASH®.

PART 3 EXECUTION

3.01 GENERAL
A. VERIFY THAT SURFACES AND CONDITIONS ARE READY TO ACCEPT THE WORK OF THIS SECTION. NOTIFY [ENGINEER] [ARCHITECT] [CONSULTANT] IN WRITING OF ANY DISCREPANCIES. COMMENCEMENT OF THE WORK OR ANY PARTS THEREOF SHALL MEAN ACCEPTANCE OF THE PREPARED SUBSTRATES.
B. ALL SURFACES MUST BE DRY, SOUND, CLEAN, FREE OF OIL, GREASE, DIRT, EXCESS MORTAR OR OTHER CONTAMINANTS DETRIMENTAL TO THE ADHESION OF THE WATER RESISTIVE AIR BARRIER MEMBRANE AND FLASHINGS. FILL VOIDS AND GAPS IN SUBSTRATE GREATER THAN 7/8 INCH IN WIDTH TO PROVIDE AN EVEN SURFACE. STRIKE MASONRY JOINTS FULL-FLUSH.
C. MINIMUM APPLICATION TEMPERATURE OF FULLY SELF-ADHERED MEMBRANE AND FLASHINGS TO BE ABOVE 20 °F (MINUS 6.0 °C).
D. ENSURE ALL PREPARATORY WORK IS COMPLETE PRIOR TO APPLYING PRIMARY FULLY SELF-ADHERED VAPOR PERMEABLE AIR BARRIER SHEET MEMBRANE.
E. MECHANICAL FASTENERS USED TO SECURE SHEATHING SURFACES OR PENETRATE SHEATHING SURFACES SHALL BE SET FLUSH WITH SHEATHING, FASTENED INTO SOLID BACKING AND COVERED WITH THE UPPER OVERLAPPING MEMBRANE. IF EXPOSED FASTENERS ARE PRESENT ON THE SURFACE OF THE MEMBRANE, COVER AND SEAL WITH VAPRO-LIQUIFLASH OR VAPROBOND®.
F. IF EXPOSED FASTENERS ARE REQUIRED, USE VAPROCAPS TO INSURE WATER/AIR TIGHT SEAL.

3.02 COORDINATION OF SELF-ADHERED VAPOR PERMEABLE AIR BARRIER MEMBRANE INSTALLATION
A. DOWNLOAD INSTALLATION INSTRUCTIONS AT HTTP://VAPROSHIELD.COM/PUBLIC-DOCUMENTS/INSTALLATION-INSTRUCTIONS.
B. INSTALLATION SUMMARY:
a. SELF-ADHERED VAPOR PERMEABLE AIR BARRIER SHEETS MAY BE INSTALLED VERTICALLY OR HORIZONTALLY OVER THE OUTSIDE FACE OF EXTERIOR SHEATHING BOARD OR OTHER APPROVED SUBSTRATES.
b. COMPLETE DETAIL WORK AT; WALL OPENINGS, BUILDING TRANSITIONS AND PENETRATIONS PRIOR TO FIELD APPLICATIONS.
c. INSTALL FULLY SELF-ADHERED VAPOR PERMEABLE AIR BARRIER SHEET OVER THE OUTSIDE FACE OF EXTERIOR SHEATHING BOARD OR SUBSTRATE, MEASURE AND PRE-CUT INTO MANAGEABLE SIZED SHEETS TO SUIT THE APPLICATION CONDITIONS.
d. INSTALL FULLY SELF-ADHERED VAPOR PERMEABLE AIR BARRIER SHEET COMPLETE AND CONTINUOUS TO SUBSTRATE IN A SEQUENTIAL MINIMAL 3 INCH (76.2 MM) OVERLAPPING WEATHERBOARD.
e. STAGGER ALL END LAP SEAMS.
f. ROLL INSTALLED MEMBRANE WITH ROLLER TO ENSURE POSITIVE CONTACT AND ADHESION WITH SUBSTRATE IMMEDIATELY.

3.03 BUILDING TRANSITION CONDITIONS
A. CONSULT PUBLISHED DETAILS AT WWW.VAPROSHIELD.COM.
B. TIE-IN TO STRUCTURAL BEAMS, COLUMNS, FLOOR SLABS AND INTERMITTENT FLOORS, PARAPET CURBS, FOUNDATION WALLS, ROOFING SYSTEMS AND AT THE INTERFACE OF DISSIMILAR MATERIALS WITH SELF-ADHERING AIR BARRIER TRANSITION AND FLASHING MEMBRANE.
C. ALIGN AND POSITION FULLY SELF-ADHERED AIR BARRIER TRANSITION AND FLASHING MEMBRANE, REMOVE PROTECTIVE FILM AND PRESS FIRMLY INTO PLACE. PROVIDE MINIMUM 3 INCH (76.2 MM) LAP ON TO SUBSTRATES.
D. ENSURE MINIMUM 3 INCH (76.2 MM) OVERLAP AT SIDE AND END LAPS OF MEMBRANE AND 6 INCH (152.4 MM) AT INSIDE AND OUTSIDE CORNERS, IF JOINTS OCCUR AT CORNER LOCATIONS.
E. ROLL MEMBRANE AND LAP SEAMS WITH ROLLER TO ENSURE POSITIVE CONTACT AND ADHESION, IMMEDIATELY.

3.04 MECHANICAL EQUIPMENT PENETRATIONS
A. MECHANICAL PIPE, ELECTRICAL CONDUIT AND/OR DUCT WORK MUST BE SECURED SOLID INTO POSITION PRIOR TO INSTALLATION OF FULLY SELF-ADHERED VAPOR PERMEABLE AIR BARRIER MEMBRANE.
B. ELECTRICAL SERVICES PENETRATING THE WALL ASSEMBLY AND FULLY SELF-ADHERED VAPOR PERMEABLE AIR BARRIER MEMBRANE MUST BE PLACED IN APPROPRIATE CONDUIT AND SECURED SOLID INTO POSITION.
C. INSTALL MANUFACTURED FLANGED PENETRATION SLEEVES AS RECOMMENDED BY SLEEVE MANUFACTURER.
D. FOR STRAIGHT SIDED PENETRATIONS, CUT AND FIT FULLY SELF-ADHERED VAPOR PERMEABLE AIR BARRIER TO ACCOMMODATE SLEEVE, INSTALL VAPROLIQUI-FLASH TO SEAL THE AIR BARRIER MEMBRANE TO DUCTWORK OR PREFORMED FLANGE SLEEVE.
E. FOR PIPE PENETRATIONS, REFER TO MANUFACTURER'S STANDARD DETAILS.

3.05 WINDOW, DOOR AND OTHER WALL OPENINGS
A. CONSULT PUBLISHED INSTALLATION INSTRUCTIONS AT WWW.VAPROSHIELD.COM.
B. REVEALFLASHING® SA FULLY SELF-ADHERED FLASHING AND VAPROLIQUI-FLASH OR VAPRO-SS FLASHINGS BY VAPROSHIELD AROUND WINDOW OR WALL OPENINGS SUBJECT TO THE OPENING SIZE AND INSTALLATION OF WINDOW, DOOR OR LOUVER TYPE.
C. REVEALFLASHING® SA FULLY SELF-ADHERED AIR BARRIER TRANSITION AND FLASHING MEMBRANE INSTALLED 2 ¾ INCH (70 MM) INTO ROUGH WALL OPENINGS FOR THE SILL, JAMBS AND HEAD.
D. REMOVE RELEASE FILM, ALIGN FLASHING MEMBRANE AND APPLY PRESSURE TO ENSURE POSITIVE CONTACT. ROLL LAP SEAMS TO ENSURE ADHESION. PROVIDE LAP SEAMS IN SINGLED FASHION, TO SHED WATER.
E. VAPROLIQUI-FLASH VAPOR PERMEABLE WATER RESISTIVE FLASHING FOR ROUGH OPENINGS
1. DOWNLOAD INSTALLATION INSTRUCTIONS AT HTTP://VAPROSHIELD.COM/PUBLIC-DOCUMENTS/INSTALLATION-INSTRUCTIONS.
2. LIQUID-APPLIED WINDOW AND DOOR FLASHING SHALL BE VAPROLIQUI-FLASH® BY VAPROSHIELD, A LIQUID-APPLIED VAPOR PERMEABLE AIR BARRIER FLASHING MATERIAL WITH RESISTANCE TO MOISTURE AND AIR LEAKAGE PROPERTIES COMPATIBLE WITH THE PRIMARY WEATHER RESISTANT AIR BARRIER MEMBRANE.
3. APPLY A 12-15 WET MIL (0.030-0.038 MM) COATING ONTO THE INSTALLED VAPROFLASHING® SA, 1 INCH (25.4 MM) ONTO THE FACE CONTINUING INTO THE ROUGH OPENING, COVERING THE 2 ¾ INCH (70 MM) VAPROFLASHING® SA AND THE EXPOSED ROUGH OPENING SURFACE.
A. THROUGH-WALL FLASHING MEMBRANE
1. DOWNLOAD INSTALLATION INSTRUCTIONS AT HTTP://VAPROSHIELD.COM/PUBLIC-DOCUMENTS/INSTALLATION-INSTRUCTIONS.
2. APPLY THROUGH-WALL SELF-ADHERED FLASHING MEMBRANE ALONG THE BASE OF MASONRY VENEER WALLS AND OVER SHELF ANGLES AS DETAILED BY DESIGNER.
a. PRESS MEMBRANE FIRMLY INTO PLACE, OVERLAP MINIMUM 3 INCHES (76 MM) AT ALL LAPS. PROMPTLY ROLL ALL SURFACES USING A HAND ROLLER TO ENSURE GOOD ADHESION.
b. APPLICATIONS SHALL FORM A CONTINUOUS FLASHING MEMBRANE AND SHALL EXTEND UP A MINIMUM OF 8 INCHES (20 CM) UP THE BACK-UP WALL.
c. SEAL THE TOP EDGE OF THE MEMBRANE WHERE IT MEETS THE SUBSTRATE USING VARPOBOND. TROWEL-APPLY A FEATHERED EDGE TO SEAL TERMINATION TO SHED WATER OR INSTALL VARPOTERMINATION BAR AND VAPROBOND® SEALANT AT THE TOP EDGE.
d. INSTALL THROUGH-WALL FLASHING MEMBRANE ½ INCH (13 MM) FROM OUTSIDE EDGE OF VENEER. PROVIDE ©END DAM" FLASHING AS DETAILED BY DESIGNER.
B. OPTIONAL VAPRO-SS FLASHING VAPOR IMPERMIABLE FLASHING FOR ROUGH OPENINGS
1. SELF-ADHERED STAINLESS STEEL MEMBRANE FOR WINDOW AND DOOR FLASHING SHALL BE VAPRO-SS FLASH® BY VAPROSHIELD, AN IMPERMEABLE AIR AND WATER BARRIER FLASHING MATERIAL, REPLACES VAPROLIQUI-FLASH.
2. APPLY VAPROFLASHING® SA, 1 INCH (25 MM) ONTO THE FACE CONTINUING INTO THE ROUGH OPENING, COVERING THE 2 ¾ INCH (70 MM) VAPROFLASHING® SA AND THE EXPOSED ROUGH OPENING SURFACE.

3.06 VERTICAL APPLICATIONS SUMMARY
A. DOWNLOAD INSTALLATION INSTRUCTIONS AT HTTP://VAPROSHIELD.COM/PUBLIC-DOCUMENTS/INSTALLATION-INSTRUCTIONS.
B. FOR VERTICAL APPLICATIONS, ALIGN SHEETS WITH AN 'INSIDE' OR 'OUTSIDE' CORNER TO AVOID WRINKLES AND MISALIGNMENT OF SUBSEQUENT APPLICATIONS.
C. MEASURE AND PRE-CUT INTO MANAGEABLE SIZED FULLY SELF-ADHERED SHEETS TO SUIT THE APPLICATION CONDITIONS.
D. ALLOW FOR EXCESS MATERIAL AT BOTTOM OF WALL TO ACCOMMODATE TIE-INS AND CONNECTIONS TO ADJACENT SURFACES.
E. ROLL UP PRE-CUT MATERIAL LENGTHS WITH RELEASE PAPER FACING OUTWARD.
F. STARTING AT A CORNER OF THE ROLL, PEEL BACK APPROX. 6" (152.4 MM) OF RELEASE FILM FROM ACROSS THE WIDTH OF THE PRE-CUT MATERIAL ROLL.
G. USING HAND PRESSURE, LIGHTLY APPLY THE EXPOSED ADHESIVE SURFACE TO THE SUBSTRATE.
H. ALLOW THE ROLLED UP MATERIAL TO DROP DOWN THE WALL, WITH THE REMAINDER OF THE RELEASE FILM STILL ATTACHED (FACING THE WALL), AND EXTEND DOWN TO LOWEST POINT OF WALL, CHECKING FOR PROPER ALIGNMENT, REPOSITIONING AS NECESSARY.
I. ALLOW FOR EXCESS MATERIAL AT BOTTOM OF WALL TO ACCOMMODATE TIE-INS AND CONNECTIONS TO ADJACENT SURFACES.
J. ALIGN AND POSITION FULLY SELF-ADHERED MEMBRANE, REMOVE RELEASE FILM AND PRESS FIRMLY INTO PLACE. PROVIDE MINIMUM 3 INCH (76 MM) OVERLAP AT SIDE AND END LAPS OF MEMBRANE.
K. CONTINUE TO REMOVE RELEASE FILM AND APPLY PRESSURE TO ENSURE POSITIVE CONTACT ONTO WALL SUBSTRATE.
L. INSTALL SUBSEQUENT SHEETS OF FULLY SELF-ADHERED VAPOR PERMEABLE AIR BARRIER SHEETS IN OVERLAPPING WEATHERBOARD FORMAT. ENSURE SHEETS LAY SMOOTH AND FLAT TO SURFACES. ROLL MEMBRANE AND LAP SEAMS WITH TWO HANDED ROLLER TO ENSURE CONTACT AND ADHESION.
M. REFER TO HTTP://VAPROSHIELD.COM/INSTALLATION/INSTRUCTIONS FOR THE MOST CURRENT AND COMPLETE INSTALLATION INSTRUCTIONS.

3.07 HORIZONTAL APPLICATIONS
A. FOR HORIZONTAL APPLICATIONS, ALIGN SHEETS AND BEGIN INSTALLATION OF WATER-RESISTIVE WEATHER BARRIER AT BOTTOM OR LOWEST POINT OF WALL.
B. TO AVOID WRINKLES AND MISALIGNMENT OF SUBSEQUENT APPLICATIONS, IT IS RECOMMENDED TO PRE-MARK OR "SNAP" A LEVEL LINE TO WORK FROM.
C. MEASURE AND PRE-CUT INTO MANAGEABLE SIZED SHEETS TO SUIT THE APPLICATION CONDITIONS.
D. ALLOW FOR EXCESS MATERIAL AT BOTTOM OF WALL TO ACCOMMODATE TIE-INS AND CONNECTIONS TO ADJACENT SURFACES.
E. ALIGN AND POSITION FULLY SELF-ADHERED MEMBRANE, REMOVE RELEASE FILM AND PRESS FIRMLY INTO PLACE. PROVIDE MINIMUM 3 INCH (76 MM) OVERLAP AT ALL SIDE AND END LAPS OF MEMBRANE. ROLL MEMBRANE AND LAPPED SEAMS WITH A TWO HANDED ROLLER TO ENSURE CONTACT AND ADHESION.
F. CONTINUE TO REMOVE RELEASE FILM AND APPLY PRESSURE TO ENSURE POSITIVE CONTACT ONTO WALL SUBSTRATE.
G. INSTALL SUBSEQUENT SHEETS OF FULLY SELF-ADHERED VAPOR PERMEABLE AIR BARRIER SHEETS IN OVERLAPPING WEATHERBOARD FORMAT. ENSURE SHEETS LAY SMOOTH AND FLAT TO SURFACES. ROLL MEMBRANE AND LAPPED SEAMS WITH A TWO HANDED ROLLER TO ENSURE CONTACT AND ADHESION.

FWH Architects
3336 Grand Blvd. Suite 201
Holiday, Florida 34690
Ph. 727. 815. 3336
Fax 727. 815. 3337

TO THE BEST OF THE KNOWLEDGE OF THE ARCHITECTS AND ENGINEERS, PLANS AND SPECIFICATIONS COMPLY WITH THE APPLICABLE MINIMUM BUILDING CODES AND THE APPLICABLE MINIMUM FIRE SAFETY STANDARDS

GUY F. FABER
FL License No. AR0015323

no.	date	revision descriptions

STARBUCKS
SHELL CONSTRUCTION
1990 STATE ROAD 19
TAVARES, FL

03.25.2024
date

24007
comm. no.

SPECIFICATIONS

A0.1

H. REFER TO HTTP://VAPROSHIELD.COM/INSTALLATION/INSTRUCTIONS FOR THE MOST CURRENT AND COMPLETE INSTALLATION INSTRUCTIONS.

3.08 BATTENS VENTILATION STRIPS, SHIMS OR MAT FOR RAIN SCREEN CLADDING SYSTEMS

C. PROVIDE AND INSTALL SPECIFIED BATTENS AND VENTILATION STRIPS UNDER CLADDING SYSTEMS.
D. INSTALL HORIZONTAL STARTER STRIP OR VENT STRIP AT BASE OF WALL, VERTICAL BATTENS AND TOP VENT STRIP, SECURE INTO SOLID BACKING READY FOR INSTALLATION OF CLADDING SYSTEM.
E. COORDINATE SPACING OF BATTENS AND VENT STRIPS TO ACCOMMODATE CLADDING SYSTEM.
F. COORDINATE SPACING OF VAPROSHIM® TO ACCOMMODATE CLADDING SYSTEM ATTACHMENTS.
G. COORDINATE ATTACHMENT OF VAPROMAT® TO ACCOMMODATE CLADDING SYSTEM ATTACHMENTS.

3.09 FASTENING CLIPS AND MASONRY TIES

A. INSTALL CLIPS AND MASONRY TIES OVER PRIMARY SELF-ADHERED VAPOR PERMEABLE AIR BARRIER MEMBRANE.
B. SECURE CLIPS AND MASONRY TIES WITH CORROSION-RESISTANT, OR STAINLESS STEEL SCREWS WITH GASKETED FASTENERS.
C. CONSULT VAPROSHIELD TECHNICAL SERVICES FOR RECOMMENDATIONS ON FASTENER TREATMENTS FOR RAIN SCREEN CLADDING ATTACHMENT COMPONENTS BY OTHERS.

3.10 FIELD QUALITY CONTROL

A. MAKE NOTIFICATION WHEN SECTIONS OF WORK ARE COMPLETE TO ALLOW REVIEW PRIOR TO COVERING FULLY SELF-ADHERED WATER-RESISTIVE VAPOR PERMEABLE AIR BARRIER SYSTEM.
B. OWNER TO ENGAGE INDEPENDENT CONSULTANT TO OBSERVE SUBSTRATE AND MEMBRANE INSTALLATION PRIOR TO PLACEMENT OF CLADDING SYSTEM(S) AND PROVIDE WRITTEN DOCUMENTATION OF OBSERVATIONS.

3.11 PROTECTION

A. PROTECT WALL AREAS COVERED WITH SELF-ADHERED WATER-RESISTIVE VAPOR PERMEABLE AIR BARRIER FROM DAMAGE DUE TO CONSTRUCTION ACTIVITIES, HIGH WIND CONDITIONS, AND EXTENDED EXPOSURE TO INCLEMENT WEATHER.
B. REVIEW CONDITION OF FULLY SELF-ADHERED WATER-RESISTIVE VAPOR PERMEABLE AIR BARRIER PRIOR TO INSTALLATION OF CLADDING. REPAIR, OR REMOVE AND REPLACE DAMAGED SECTIONS WITH NEW MEMBRANE.
C. RECOMMEND TO CAP AND PROTECT EXPOSED BACK-UP WALLS AGAINST WET WEATHER CONDITIONS DURING AND AFTER APPLICATION OF MEMBRANE, INCLUDING WALL OPENINGS AND CONSTRUCTION ACTIVITY ABOVE COMPLETED FULLY SELF-ADHERED WATER-RESISTIVE VAPOR PERMEABLE AIR BARRIER INSTALLATIONS.
D. REMOVE AND REPLACE WATER-RESISTIVE WEATHER BARRIER MEMBRANE AFFECTED BY CHEMICAL SPILLS OR SURFACTANTS.

END OF SECTION 07271

SECTION 07280 FLUID APPLIED AIR AND WATER BARRIER

PART 1 - GENERAL

1.1 SUMMARY

A. SECTION INCLUDES VAPOR-PERMEABLE, FLUID-APPLIED AIR AND WATER BARRIERS.

1.2 DEFINITIONS

A. WEATHER BARRIER: A COMBINATION OF MATERIALS AND ACCESSORIES THAT DO THE FOLLOWING:
1. PREVENT THE ACCUMULATION OF WATER AS A WATER-RESISTIVE BARRIER.
2. MINIMIZE THE AIR LEAKAGE INTO OR OUT OF THE BUILDING ENVELOPE AS A CONTINUOUS AIR BARRIER.
3. PROVIDE SUFFICIENT WATER VAPOR TRANSMISSION TO ENABLE DRYING AS A VAPOR PERMEABLE MEMBRANE.
B. WATER-RESISTIVE BARRIER: A COMBINATION OF MATERIALS AND ACCESSORIES THAT PREVENT THE ACCUMULATION OF WATER WITHIN THE WALL ASSEMBLY IN ACCORDANCE WITH IBC SECTION 1403.2.
1. PRIMARY LAYER: WATER-RESISTIVE BARRIER (FLUID-APPLIED) INSTALLED CLOSEST TO BUILDING INTERIOR WITH ALL FLASHINGS AND TERMINATIONS INTEGRATED TO THIS LAYER.
2. SECONDARY LAYER: OUTERMOST PART OF A DOUBLE-LAYER SYSTEM AND WHERE DRAINAGE IS REQUIRED BEHIND CLADDINGS SUCH AS STUCCO, ADHERED MASONRY, AND INSTALLATION METHODS UTILIZING A LATH.
C. CONTINUOUS AIR BARRIER: THE COMBINATION OF INTERCONNECTED MATERIALS, ASSEMBLIES, AND SEALED JOINTS AND COMPONENTS OF THE BUILDING ENVELOPE THAT MINIMIZE AIR LEAKAGE INTO OR OUT OF BUILDING ENVELOPE IN ACCORDANCE WITH ASHRAE 90.1 SECTION 5.4.3.1.
D. VAPOR-PERMEABLE MEMBRANE: THE PROPERTY OF HAVING A WATER-VAPOR PERMEANCE RATING OF 10 PERMS OR GREATER, WHEN TESTED IN ACCORDANCE WITH THE DESICCANT METHOD USING PROCEDURE A OF ASTM E 96 IN ACCORDANCE WITH DEFINITION IN INTERNATIONAL BUILDING CODE. VAPOR-PERMEABLE MATERIAL PERMITS PASSAGE OF MOISTURE VAPOR THROUGH VAPOR DIFFUSION.
E. VAPOR DIFFUSION: A SLOW MOVEMENT OF INDIVIDUAL WATER VAPOR MOLECULES FROM REGIONS OF HIGHER TO LOWER WATER VAPOR CONCENTRATION (HIGHER TO LOWER VAPOR PRESSURE).

1.3 PREINSTALLATION MEETINGS

A. PREINSTALLATION CONFERENCE: CONDUCT CONFERENCE AT PROJECT SITE.
1. MEET WITH OWNER, ARCHITECT, MANUFACTURER'S CERTIFIED INSTALLER, AND INSTALLERS OF WORK THAT INTERFACES WITH OR AFFECTS WEATHER BARRIER.
2. REVIEW METHODS AND PROCEDURES RELATED TO WEATHER BARRIER INSTALLATION, INCLUDING MANUFACTURER'S WRITTEN INSTRUCTIONS.
3. REVIEW AND FINALIZE CONSTRUCTION, AND VERIFY AVAILABILITY OF MATERIALS, INSTALLER'S PERSONNEL, EQUIPMENT, AND FACILITIES NEEDED TO MAKE PROGRESS AND AVOID DELAYS.
4. EXAMINE SUBSTRATE CONDITIONS AND FINISHES FOR COMPLIANCE WITH REQUIREMENTS.
5. REVIEW FLASHINGS, SPECIAL WEATHER BARRIER DETAILS, WEATHER BARRIER PENETRATIONS, AND CONDITION OF OTHER CONSTRUCTION THAT AFFECTS WEATHER BARRIER.
6. REVIEW WEATHER BARRIER MANUFACTURER'S PROJECT REGISTRATION AND OBSERVATION PROCESS.

1.4 ACTION SUBMITTALS

A. PRODUCT DATA: FOR EACH TYPE OF PRODUCT.
1. FOR WEATHER BARRIER, INCLUDE DATA ON AIR AND WATER-VAPOR PERMEANCE BASED ON TESTING IN ACCORDANCE WITH REFERENCED STANDARDS.
B. SUSTAINABLE DESIGN SUBMITTALS:
1. PRODUCT DATA: INCLUDING THE FOLLOWING INFORMATION:
A. PROVIDE HEALTH PRODUCT DECLARATIONS (HPDS).
B. PROVIDE ENVIRONMENTAL PRODUCT DECLARATIONS (EPD'S).
C. SHOP DRAWINGS:
1. SHOW DETAILS OF WEATHER BARRIER AT TERMINATIONS, OPENINGS, AND PENETRATIONS.
2. SHOW DETAILS OF WEATHER BARRIER APPLICATIONS.

1.5 INFORMATIONAL SUBMITTALS

A. MANUFACTURER'S INSTRUCTIONS: FOR INSTALLATION OF EACH PRODUCT SPECIFIED.
B. QUALIFICATION DATA: FOR INSTALLER.
C. SAMPLE WARRANTY: FOR MANUFACTURER'S WARRANTY.

1.6 QUALITY ASSURANCE

A. INSTALLER QUALIFICATIONS: A QUALIFIED FIRM THAT IS CERTIFIED BY WEATHER BARRIER SYSTEM MANUFACTURER TO INSTALL MANUFACTURER'S PRODUCT.
B. MOCKUPS: BUILD MOCKUPS TO SET QUALITY STANDARDS FOR MATERIALS AND EXECUTION.
1. BUILD INTEGRATED MOCKUPS OF EXTERIOR WALL ASSEMBLY OF 150 SQ. FT. INCORPORATING BACKUP WALL CONSTRUCTION, EXTERNAL CLADDING, WINDOW, STOREFRONT, DOOR FRAME AND SILL, INSULATION, TIES AND OTHER PENETRATIONS, AND FLASHING TO DEMONSTRATE SURFACE PREPARATION, CRACK AND JOINT TREATMENT, APPLICATION OF AIR BARRIERS, AND SEALING OF GAPS, TERMINATIONS, AND PENETRATIONS OF AIR-BARRIER ASSEMBLY.
A. INCLUDE JUNCTION WITH ROOFING MEMBRANE, BUILDING CORNER CONDITION, FOUNDATION WALL INTERSECTION AND FENESTRATION AND WALL SURFACE.
B. IF ARCHITECT DETERMINES THAT MOCKUPS DO NOT COMPLY WITH REQUIREMENTS, RECONSTRUCT MOCKUPS AND APPLY WEATHER BARRIER UNTIL MOCKUPS ARE APPROVED.
2. APPROVAL OF MOCKUPS DOES NOT CONSTITUTE APPROVAL OF DEVIATIONS FROM THE CONTRACT DOCUMENTS CONTAINED IN MOCKUPS UNLESS ARCHITECT SPECIFICALLY APPROVES SUCH DEVIATIONS IN WRITING.
3. SUBJECT TO COMPLIANCE WITH REQUIREMENTS, APPROVED MOCKUPS MAY BECOME PART OF THE COMPLETED WORK IF UNDISTURBED AT TIME OF SUBSTANTIAL COMPLETION.
A. ASTM E 331 TEST PARAMETERS: 12.5 PSF PRESSURE FOR 15 -MINUTE DURATION.
C. MANUFACTURER'S FIELD SERVICE: REGISTER PROJECT WITH WEATHER BARRIER MANUFACTURER PRIOR TO INSTALLATION OF WEATHER BARRIER AND COMPLY WITH WEATHER BARRIER MANUFACTURER'S PROJECT REGISTRATION AND OBSERVATION PROCESS.

1.7 DELIVERY, STORAGE, AND HANDLING

A. REMOVE AND REPLACE LIQUID MATERIALS THAT CANNOT BE APPLIED WITHIN THEIR STATED SHELF LIFE.
B. PROTECT STORED MATERIALS FROM DIRECT SUNLIGHT.
C. STORE IN A DRY ENVIRONMENT BETWEEN 50 AND 80 DEG F.

1.8 WARRANTY

A. MANUFACTURER'S PRODUCT WARRANTY: MANUFACTURER AGREES TO REPAIR OR REPLACE WEATHER BARRIER PRODUCT THAT FAILS IN MATERIALS WITHIN SPECIFIED WARRANTY PERIOD.
1. WARRANTY PERIOD: 10 YEARS FROM DATE OF PRODUCT PURCHASE.

PART 2 - PRODUCTS

2.1 MANUFACTURERS

A. SOURCE LIMITATIONS: OBTAIN WEATHER BARRIER ASSEMBLY COMPONENTS, INCLUDING WEATHER BARRIER, WEATHER BARRIER FLASHING FROM MANUFACTURER APPROVED BY WEATHER BARRIER MANUFACTURER.

2.2 PERFORMANCE REQUIREMENTS

A. GENERAL PERFORMANCE: INSTALLED WEATHER BARRIER AND ACCESSORIES SHALL WITHSTAND SPECIFIED WIND PRESSURES, LIQUID WATER PENETRATION, AND WATER VAPOR PRESSURES, WITHOUT FAILURE DUE TO DEFECTIVE MANUFACTURE OF PRODUCTS.

2.3 WEATHER BARRIER

A. BASIS-OF-DESIGN PRODUCT: DUPONT DE NEMOURS INC. TYVEK FLUID APPLIED WB+ OR COMPARABLE PRODUCT BY ONE OF THE FOLLOWING:
1. CARLISLE FIRE RESIST BARRITHANE VP
2. GRACE PERM-A-BARRIER VPL 50
B. FLUID-APPLIED MEMBRANE: ASTM E 2357 PASSED, AIR BARRIER ASSOCIATION OF AMERICA (ABAA) EVALUATED AIR BARRIER ASSEMBLY, AND ASSEMBLY WATER RESISTANCE IN ACCORDANCE WITH ASTM E 331; WITH FLAME-SPREAD AND SMOKE-DEVELOPED INDEXES OF LESS THAN 25 AND 450, RESPECTIVELY, WHEN TESTED IN ACCORDANCE WITH ASTM E 84; UV STABILIZED FOR NINE-MONTH EXPOSURE; AND ACCEPTABLE TO AUTHORITIES HAVING JURISDICTION.

2.4 WEATHER BARRIER FLASHING

A. CONFORMABLE WEATHER BARRIER FLASHING: COMPOSITE FLASHING MATERIAL COMPOSED OF MICRO-CREPED, POLYETHYLENE LAMINATE WITH A 100 PERCENT BUTYL-BASED ADHESIVE LAYER; AAMA 711 CLASS A (NO PRIMER), LEVEL 3 THERMAL EXPOSURE OF 176 DEG F (80 DEG C) FOR SEVEN DAYS.
1. BASIS-OF-DESIGN PRODUCT: DUPONT™ FLEXWRAP™ NF:
2. CONFORMABILITY: ABLE TO CREATE A SEAMLESS SILL PAN EXTENDING UP THE JAMBS WITHOUT CUTS, PATCHES, OR FASTENERS.
B. STRIP FLASHING: COMPOSITE FLASHING MATERIAL COMPOSED OF SPUNBONDED POLYETHYLENE LAMINATE WITH A 100 PERCENT BUTYL-BASED ADHESIVE LAYER; AAMA 711, CLASS A (NO PRIMER), LEVEL 3 THERMAL EXPOSURE OF 176 DEG F FOR SEVEN DAYS.
1. BASIS-OF-DESIGN PRODUCT: DUPONT DE NEMOURS INC. TYVEK® STRAIGHTFLASH OR TYVEK® STRAIGHTFLASH VF.
C. PRIMER FOR FLASHINGS: SYNTHETIC RUBBER-BASED PRODUCT. SPRAY APPLIED. STRENGTHEN THE ADHESIVE BOND AT LOW TEMPERATURE APPLICATIONS BETWEEN WEATHER PRODUCTS, SUCH AS SELF-ADHERED FLASHING PRODUCTS, COMMERCIAL BUILDING WRAPS, AND COMMON BUILDING SHEATHING MATERIALS.
1. BASIS OF DESIGN PRODUCT: DUPONT™ ADHESIVE PRIMER.
A. SUBSTRATES: CONCRETE MASONRY UNITS (CMU), EXTERIOR GYPSUM SHEATHING, ORIENTED STRAND BOARD (OSB), ALUMINUM, AND VINYL.
2. CHEMICAL COMPATIBILITY PER AAMA 713: PASS.
3. FLAME SPREAD INDEX PER ASTM E 84: 5.
4. SMOKE DEVELOPMENT INDEX PER ASTM E 84: 0.

2.5 FLUID APPLIED FLASHING AND SEALANT

A. FLUID APPLIED FLASHING: TROWEL OR BRUSH APPLIED, NON-WATER SOLUBLE, SINGLE COMPONENT, SILYL TERMINATED POLYETHER TECHNOLOGY (STPE), VAPOR PERMEABLE, FLASHING MATERIAL.
1. BASIS-OF-DESIGN PRODUCT: DUPONT™ TYVEK® FLUID APPLIED FLASHING AND JOINT COMPOUND.
B. FLUID APPLIED SEALANT: ASTM C 920
1. EXTENSION-RECOVERY/ADHESION PER ASTM C 736: 100 PERCENT RECOVERY.
2. ACCELERATED WEATHERING/LOW TEMPERATURE FLEXIBILITY PER ASTM C 793: PASS.

2.6 DRAINAGE LAYER

A. DRAINAGE LAYER: WEATHER BARRIER MEMBRANE WITH DRAINAGE.
1. BASIS-OF-DESIGN PRODUCT: DUPONT TYVEK FLUID APPLIED WB+ AND TYVEK COMMERCIALWRAP D.
2. DRAINABILITY: 98 PERCENT OR GREATER WHEN TESTED IN ACCORDANCE WITH ASTM E 2273.

PART 3 - EXECUTION

3.1 EXAMINATION

A. EXAMINE SUBSTRATES, AREAS, AND CONDITIONS, WITH INSTALLER PRESENT, FOR COMPLIANCE WITH REQUIREMENTS AND OTHER CONDITIONS AFFECTING PERFORMANCE OF THE WORK.
1. VERIFY THAT SUBSTRATES ARE SOUND AND FREE OF OIL, GREASE, DIRT, EXCESS MORTAR, OR OTHER CONTAMINANTS.
2. VERIFY THAT SUBSTRATES HAVE CURED AND AGED FOR MINIMUM TIME RECOMMENDED IN WRITING BY WEATHER BARRIER MANUFACTURER.
3. VERIFY THAT SUBSTRATES ARE VISIBLY DRY AND FROST-FREE.
A. FLUID-APPLIED WEATHER BARRIER MAY BE APPLIED TO DAMP SURFACES.
B. SURFACES ARE CONSIDERED DAMP IF THERE IS NO VISIBLE WATER ON THE SURFACE, AND NO TRANSFER OF WATER TO THE SKIN WHEN TOUCHED.
C. APPLY ACCESSORY PRODUCTS ONLY TO CLEAN AND DRY SURFACES.
4. VERIFY THAT SUBSTRATES ARE FREE OF EFFLORESCENCE AND MOLD.
5. VERIFY THAT MASONRY JOINTS ARE FLUSH AND FILLED WITH MORTAR.
6. VERIFY THAT TOP-OF-WALL SYSTEM HAS BEEN CAPPED OR COVERED TO PREVENT WATER GETTING BEHIND THE FACADE AND INTO WALL CAVITY.
7. VERIFY CONTINUOUS PATH FOR MOISTURE DRAINAGE.
A. VERIFY THAT CONTINUOUS PATH FOR DRAINAGE IS NOT BLOCKED OR DISRUPTED, WHICH RESULTS IN EXCESS MOISTURE BUILDUP IN WALL CAVITY.
B. VERIFY THAT SURFACES TO RECEIVE WEATHER BARRIER ARE ABOVE GRADE.
B. VERIFY THAT SUBSTRATE AND SURFACE CONDITIONS ARE IN ACCORDANCE WITH COMMERCIAL WEATHER BARRIER MANUFACTURER RECOMMENDATIONS PRIOR TO INSTALLATION.
1. VERIFY THAT ROUGH SILL FRAMING FOR DOORS AND WINDOWS SLOPES DOWNWARD TOWARDS THE EXTERIOR AND IS LEVEL ACROSS WIDTH OF OPENING.
C. VERIFY AIR AND SURFACE TEMPERATURES ARE ABOVE 25 DEG F WITH A MAXIMUM SURFACE TEMPERATURE OF 140 DEG F. DO NOT INSTALL ONCE AMBIENT TEMPERATURE EXCEEDS 95 DEG F, UNLESS SURFACE IS SHADED.
D. PROCEED WITH INSTALLATION ONLY AFTER UNSATISFACTORY CONDITIONS HAVE BEEN CORRECTED.

3.2 PREPARATION

A. CLEAN, PREPARE, TREAT, FILL, AND SEAL SUBSTRATE AND JOINTS AND CRACKS IN SUBSTRATE IN ACCORDANCE WITH MANUFACTURER'S WRITTEN INSTRUCTIONS AND DETAILS. PROVIDE CLEAN, DUST-FREE, AND DRY SUBSTRATE FOR AIR-BARRIER APPLICATION.
B. REMOVE GREASE, OIL, BITUMEN, FORM-RELEASE AGENTS, PAINTS, CURING COMPOUNDS, AND OTHER PENETRATING CONTAMINANTS OR FILM-FORMING COATINGS FROM CONCRETE.
C. REMOVE FINS, RIDGES, MORTAR, AND OTHER PROJECTIONS AND FILL HONEYCOMB, AGGREGATE POCKETS, HOLES, AND OTHER VOIDS IN CONCRETE WITH SUBSTRATE-PATCHING MATERIAL.
D. REMOVE EXCESS MORTAR FROM MASONRY TIES, SHELF ANGLES, AND OTHER OBSTRUCTIONS.
E. AT CHANGES IN SUBSTRATE PLANE, APPLY SEALANT OR TERMINATION MASTIC BEADS AT SHARP CORNERS AND EDGES TO FORM A SMOOTH TRANSITION FROM ONE PLANE TO ANOTHER.
F. COVER GAPS IN SUBSTRATE PLANE AND FORM A SMOOTH TRANSITION FROM ONE SUBSTRATE PLANE TO ANOTHER WITH STAINLESS-STEEL SHEET MECHANICALLY FASTENED TO STRUCTURAL FRAMING TO PROVIDE CONTINUOUS SUPPORT FOR AIR BARRIER.
G. WHEN SPRAYING IS METHOD OF APPLICATION, TAPER ENDS OF THE JOINT TREATMENT TO ASSIST MAINTAINING A WALL SYSTEM FREE OF PINHOLES AND VOIDS.
H. TREAT ALL NON-MOVING TRANSITION JOINTS TO BEAMS, COLUMNS, AND DISSIMILAR MATERIALS BY APPLYING A 2_INCH-WIDE BY 60-MIL-THICK COAT OF FLUID-APPLIED FLASHING ACROSS THE JOINT.
I. APPLY 25-MIL-THICK COAT OF FLUID-APPLIED FLASHING, EXTENDING A MINIMUM 2 INCHES ON EACH SURFACE, AND TREAT THE FOLLOWING CONDITIONS:
1. JOINTS UP TO 1/4 INCH.
2. JOINTS 1/4_ TO 1/2_INCH; REINFORCE WITH FIBERGLASS-MESH TAPE.
3. JOINTS AND TRANSITIONS UP TO 1 INCH; TREAT USING STRIP FLASHING.
J. BRIDGE [ISOLATION JOINTS] [EXPANSION JOINTS] [AND] DISCONTINUOUS WALL-TO-WALL, DECK-TO-WALL, AND DECK-TO-DECK JOINTS WITH AIR-BARRIER ACCESSORY MATERIAL THAT ACCOMMODATES JOINT MOVEMENT IN ACCORDANCE WITH MANUFACTURER'S WRITTEN INSTRUCTIONS AND DETAILS.
K. WHEN SPRAYING IS METHOD OF APPLICATION, TAPER ENDS OF FLUID APPLIED CORNER TREATMENT TO WALL SUBSTRATE.
L. TREAT INSIDE AND OUTSIDE CORNERS BY APPLYING A 25-MIL-THICK COAT OF FLUID APPLIED WEATHER BARRIER A MINIMUM 2 INCHES ON EACH ADJOINING SURFACE. APPLY FILLET BEAD OF FLUID-APPLIED SEALANT TO INSIDE CORNERS TO ENSURE CONTINUITY. ALTERNATIVELY, TREAT CORNERS USING STRIP FLASHING. PRESS STRIP FLASHING INTO INSIDE CORNERS; ENSURE THAT IT IS FULLY ADHERED TO SUBSTRATE.
M. SEAL PENETRATIONS USING FLUID-APPLIED FLASHING OR SEALANT. EXTEND FILLET BEAD 1/2 INCH ONTO BOTH SURFACES.
N. TREAT EMBEDDED MASONRY ANCHORS BY APPLYING A COAT OF FLUID-APPLIED WEATHER BARRIER OR FLUID-APPLIED FLASHING AROUND BASE OF THE ANCHOR.

3.3 ACCESSORIES INSTALLATION

A. INSTALL ACCESSORY MATERIALS IN ACCORDANCE WITH AIR-BARRIER MANUFACTURER'S WRITTEN INSTRUCTIONS AND DETAILS TO FORM A SEAL WITH ADJACENT CONSTRUCTION AND ENSURE CONTINUITY OF AIR AND WATER BARRIER.
1. COORDINATE INSTALLATION OF AIR BARRIER WITH INSTALLATION OF ROOFING MEMBRANE AND BASE FLASHING TO ENSURE CONTINUITY OF AIR BARRIER WITH ROOFING MEMBRANE.
2. INSTALL TRANSITION STRIP ON ROOFING MEMBRANE OR BASE FLASHING, FOR A MINIMUM 3 INCHES COVERAGE OVER EACH SUBSTRATE.
3. UNLESS MANUFACTURER RECOMMENDS IN WRITING AGAINST PRIMING, APPLY PRIMER TO SUBSTRATES AT REQUIRED RATE AND ALLOW TO DRY.
4. USE RECOMMENDED PRIMER WHEN APPLYING SELF-ADHERED FLASHING PRODUCTS ON CONCRETE, MASONRY, AND FIBER FACED EXTERIOR GYPSUM BOARD SUBSTRATES. PRIMING IS GENERALLY NOT REQUIRED FOR ADHERING SELF-ADHERED FLASHING PRODUCTS TO WOOD. HOWEVER, ADVERSE WEATHER CONDITIONS OR COLDER TEMPERATURES MAY REQUIRE A PRIMER TO PROMOTE ADHESION. PRIMING IS NOT REQUIRED WHEN APPLYING FLUID-APPLIED PRODUCTS, EXCEPT ON CUT EDGES OF EXTERIOR GYPSUM SHEATHING.
5. APPLY PRESSURE ALONG ENTIRE SURFACE OF STRIP FLASHING FOR GOOD BOND USING A J-ROLLER OR FIRM HAND PRESSURE. REMOVE ALL WRINKLES AND BUBBLES BY SMOOTHING SURFACE AND REPOSITIONING AS NECESSARY.
B. CONNECT AND SEAL EXTERIOR WALL AIR-BARRIER MATERIAL CONTINUOUSLY TO ROOFING-MEMBRANE AIR BARRIER, CONCRETE BELOW-GRADE STRUCTURES, FLOOR-TO-FLOOR CONSTRUCTION, EXTERIOR GLAZING AND WINDOW SYSTEMS, GLAZED CURTAIN-WALL SYSTEMS, STOREFRONT SYSTEMS, EXTERIOR LOUVERS, EXTERIOR DOOR FRAMING, AND OTHER CONSTRUCTION USED IN EXTERIOR WALL OPENINGS, USING ACCESSORY MATERIALS.
C. WHEN APPLYING SELF-ADHERED FLASHING PRODUCTS OVER A CURED FLUID-APPLIED MEMBRANE, FIRST APPLY A WET BED OF FLUID-APPLIED PRODUCT.
D. SEAL FASTENERS OF MECHANICALLY ATTACHED SUPPORTS OR FURRING STRIPS IN HIGH-PERFORMANCE BUILDING ENVELOPE DESIGNS.
1. APPLY DOUBLE-SIDED BUTYL TAPE TO BACK OF SUPPORT BRACKET AT FASTENER LOCATION.
2. EMBED SUPPORT BRACKET INTO AN ADDITIONAL WET BED OF FLUID APPLIED PRODUCT.
3. ADHERE BUTYL-BASED FLASHING PATCH TO WALL AT FASTENER LOCATION.
4. USE ALTERNATE METHOD AS APPROVED BY THE MANUFACTURER.
E. AT END OF EACH WORKING DAY, SEAL TOP EDGE OF STRIPS AND TRANSITION STRIPS TO SUBSTRATE WITH MANUFACTURER APPROVED PRODUCT.
F. APPLY JOINT SEALANTS FORMING PART OF AIR-BARRIER ASSEMBLY WITHIN MANUFACTURER'S RECOMMENDED APPLICATION TEMPERATURE RANGES. CONSULT MANUFACTURER WHEN SEALANT CANNOT BE APPLIED WITHIN THESE TEMPERATURE RANGES.
G. FLASHING SILL AREA FOR WINDOWS AND DOORS:
1. USE 6_INCH-WIDE CONFORMABLE FLASHING FOR 2- BY 4_INCH FRAMING AND 9_INCH-WIDE CONFORMABLE FLASHING FOR 2- BY 6_INCH FRAMING. WHEN RIGID BACK DAMS ARE REQUIRED OR DESIRED, ONE OPTION TO USE IS A 3/4_INCH CORNER GUARD (BACK DAM), CUT TO LENGTH OF SILL, AND NAILED INTO PLACE ON INTERIOR EDGE OF SILL PRIOR TO INSTALLATION OF 9_INCH-WIDE CONFORMABLE FLASHING. AFTERWARD, INSTALL 9_INCH-WIDE CONFORMABLE FLASHING OVER SILL AND CORNER GUARD BACK DAM.
2. INSTALL WITHOUT STRETCHING CONFORMABLE FLASHING WHEN INSTALLING ALONG SILLS OR JAMBS. CONFORMABLE FLASHING IS INTENDED TO BE STRETCHED WHEN COVERING CORNERS OR CURVED SECTIONS.
H. APPLY FLUID-APPLIED FLASHING PRODUCTS FROM HEAD OF OPENING DOWN. USE A CORNER TROWEL TO SMOOTH CORNERS.
I. REPAIRS:
1. COAT SMALL DAMAGED AREAS WITH LAYER OF FLUID-APPLIED PRODUCT.
2. REINFORCE LARGE DAMAGED AREAS WITH FIBERGLASS MESH OR REPLACE DAMAGED SUBSTRATE BEFORE REAPPLYING FLUID-APPLIED PRODUCT.

3.4 PRIMARY AIR-BARRIER MATERIAL INSTALLATION

A. APPLY AIR-BARRIER MATERIAL TO FORM A SEAL WITH STRIPS AND TRANSITION STRIPS, AND TO ACHIEVE A CONTINUOUS AIR BARRIER IN ACCORDANCE WITH AIR-BARRIER MANUFACTURER'S WRITTEN INSTRUCTIONS AND DETAILS. APPLY AIR-BARRIER MATERIAL WITHIN MANUFACTURER'S RECOMMENDED APPLICATION TEMPERATURE RANGES.
1. UNLESS MANUFACTURER RECOMMENDS IN WRITING AGAINST PRIMING, APPLY PRIMER TO SUBSTRATES AT REQUIRED RATE AND ALLOW IT TO DRY.
2. LIMIT PRIMING TO AREAS THAT WILL BE COVERED BY AIR-BARRIER MATERIAL ON SAME DAY. REPRIME AREAS EXPOSED FOR MORE THAN 24 HOURS.
3. WHERE MULTIPLE PRIME COATS ARE NEEDED TO ACHIEVE REQUIRED BOND, ALLOW ADEQUATE DRYING TIME BETWEEN COATS.
4. FLUID APPLIED PRODUCTS MAY BE OVERCOATED ONCE A TOUCH-FREE SKIN HAS FORMED. EXTERIOR INSULATION AND CLADDING MAY BE INSTALLED ONCE THE MEMBRANE HAS CURED SUFFICIENTLY TO RESIST DAMAGE DURING INSTALLATION.
B. APPLY AIR BARRIER MATERIAL IN ACCORDANCE WITH AIR-BARRIER MANUFACTURER'S WRITTEN INSTRUCTIONS AND RECOMMENDATIONS.
1. ROLLER APPLICATION:
A. NAP ROLLING: USE A ROLLER COVER WITH A 1/2- TO 3/4-INCH NAP.
2. SPRAY APPLICATION:
A. MASK OFF ADJOINING SURFACES NOT COVERED BY AIR BARRIER TO PREVENT SPILLAGE AND OVERSPRAY AFFECTING OTHER CONSTRUCTION.
B. USE SPRAY GUARD.
C. BACK ROLLING: USE A ROLLER COVER WITH A 1-1/2- TO 3/4-INCH NAP. APPLY FLUID-APPLIED PRODUCT IN A SINGLE COAT AT 25 MILS THICK. CONTROL THICKNESS BY APPLYING APPROPRIATE VOLUME OVER A MARKED AREA AND SPOT CHECKING WITH A WET-MIL GAUGE.
C. INTEGRATE FLUID-APPLIED PRODUCT WITH THROUGH-WALL FLASHING AND WINDOW AND DOOR FLASHING BY OVERLAPPING FLASHING WITH FLUID-APPLIED PRODUCT A MINIMUM 2 INCHES.
D. INSPECT SURFACES TO ENSURE THAT FLUID-APPLIED PRODUCTS ARE CONTINUOUS AND FREE OF ANY VOIDS OR PINHOLES.
E. DO NOT COVER AIR BARRIER UNTIL IT HAS BEEN TESTED AND INSPECTED BY THE TESTING AGENCY.
F. CORRECT DEFICIENCIES IN OR REMOVE AIR BARRIER THAT DOES NOT COMPLY WITH REQUIREMENTS; REPAIR SUBSTRATES AND REAPPLY AIR-BARRIER COMPONENTS.

3.5 FIELD QUALITY CONTROL

A. ABAA QUALITY ASSURANCE PROGRAM: PERFORM EXAMINATIONS, PREPARATION, INSTALLATION, TESTING, AND INSPECTIONS UNDER ABAA'S QUALITY ASSURANCE PROGRAM.
B. INSPECTIONS: AIR-BARRIER MATERIALS, ACCESSORIES, AND INSTALLATION ARE SUBJECT TO INSPECTION FOR COMPLIANCE WITH REQUIREMENTS.
1. CONTINUITY OF AIR-BARRIER SYSTEM HAS BEEN ACHIEVED THROUGHOUT THE BUILDING ENVELOPE WITHOUT GAPS, HOLES, OR PINHOLES.
2. AIR-BARRIER DRY FILM THICKNESS.
3. CONTINUOUS STRUCTURAL SUPPORT OF AIR-BARRIER SYSTEM PROVIDED.
4. MASONRY AND CONCRETE SURFACES ARE SMOOTH, CLEAN, AND FREE OF CAVITIES, PROTRUSIONS, AND MORTAR DROPPINGS.
5. SITE CONDITIONS FOR APPLICATION TEMPERATURE, AND DRYNESS OF SUBSTRATES ARE MAINTAINED.
6. MAXIMUM EXPOSURE TIME OF MATERIALS TO UV DETERIORATION NOT EXCEEDED.
7. SURFACES PRIMED, WHERE APPLICABLE.
8. LAPS IN STRIPS AND TRANSITION STRIPS COMPLY WITH MINIMUM REQUIREMENTS, ARE SHINGLED IN CORRECT DIRECTION (OR MASTIC APPLIED ON EXPOSED EDGES), AND ARE WITHOUT FISHMOUTHS.
9. TERMINATION MASTIC APPLIED ON CUT EDGES.
10. STRIPS AND TRANSITION STRIPS FIRMLY ADHERED TO SUBSTRATE.
11. COMPATIBLE MATERIALS USED.
12. TRANSITIONS AT CHANGES IN DIRECTION AND STRUCTURAL SUPPORT AT GAPS PROVIDED.
13. CONNECTIONS BETWEEN ASSEMBLIES (AIR-BARRIER AND SEALANTS) COMPLY WITH REQUIREMENTS FOR CLEANLINESS, SURFACE PREPARATION AND PRIMING, STRUCTURAL SUPPORT, INTEGRITY, AND CONTINUITY OF SEAL.
14. EACH PENETRATION SEALED.
C. INSPECTIONS.
1. APPLY ADDITIONAL AIR-BARRIER MATERIAL, IN ACCORDANCE WITH MANUFACTURER'S WRITTEN INSTRUCTIONS, WHERE INSPECTION RESULTS INDICATE INSUFFICIENT THICKNESS.
2. REMOVE AND REPLACE DEFICIENT AIR-BARRIER COMPONENTS FOR RETESTING AS SPECIFIED ABOVE.
D. REPAIR DAMAGE TO AIR BARRIERS CAUSED BY TESTING; FOLLOW MANUFACTURER'S WRITTEN INSTRUCTIONS.
E. PREPARE TEST AND INSPECTION REPORTS.

3.6 CLEANING AND PROTECTION

A. PROTECT AIR-BARRIER SYSTEM FROM DAMAGE DURING APPLICATION AND REMAINDER OF CONSTRUCTION PERIOD, IN ACCORDANCE WITH MANUFACTURER'S WRITTEN INSTRUCTIONS.
1. PROTECT AIR BARRIER FROM EXPOSURE TO UV LIGHT AND HARMFUL WEATHER EXPOSURE AS RECOMMENDED IN WRITING BY MANUFACTURER. IF EXPOSED TO THESE CONDITIONS FOR LONGER THAN RECOMMENDED, REMOVE AND REPLACE AIR BARRIER OR INSTALL ADDITIONAL, FULL-THICKNESS, AIR-BARRIER APPLICATION AFTER REPAIRING AND PREPARING THE OVEREXPOSED MATERIALS IN ACCORDANCE WITH AIR-BARRIER MANUFACTURER'S WRITTEN INSTRUCTIONS.
2. PROTECT AIR BARRIER FROM CONTACT WITH INCOMPATIBLE MATERIALS AND SEALANTS NOT APPROVED BY AIR-BARRIER MANUFACTURER.
B. CLEAN SPILLS, STAINS, AND SOILING FROM CONSTRUCTION THAT WOULD BE EXPOSED IN THE COMPLETED WORK USING CLEANING AGENTS AND PROCEDURES RECOMMENDED IN WRITING BY MANUFACTURER OF AFFECTED CONSTRUCTION.
C. REMOVE MASKING MATERIALS AFTER INSTALLATION.

END OF SECTION 07280

SECTION 07423 COMPOSITE WALL PANELS

PART I - GENERAL

1.1 SECTION INCLUDES:

A. EXTERIOR, PANELIZED FIBER CEMENT CLADDING SYSTEM AND ACCESSORIES TO COMPLETE A DRAINED AND BACK-VENTILATED RAINSCREEN.

1.2 RELATED SYSTEMS

A. STRUCTURAL METAL STUD FRAMING
B. ROUGH CARPENTRY
C. SHEATHING
D. THERMAL PROTECTION
E. WEATHER BARRIERS
F. FLASHING AND SHEET METAL
G. JOINT PROTECTION

1.3 REFERENCES

A. AMERICAN ARCHITECTURAL MANUFACTURERS ASSOCIATION (AAMA):
1. AAMA 509-09 - VOLUNTARY TEST AND CLASSIFICATION METHOD OF DRAINED AND BACK VENTILATED RAIN SCREEN WALLCLADDING SYSTEMS
B. ASTM INTERNATIONAL (ASTM):
1. ASTM C 518 - STANDARD TEST METHOD FOR STEADY-STATE THERMAL TRANSMISSION PROPERTIES BY MEANS OF THE HEAT FLOW METER APPARATUS.
2. ASTM C 1185 - STANDARD TEST METHODS FOR SAMPLING AND TESTING NON-ASBESTOS FIBER CEMENT.
A. ASTM C 1186 - STANDARD SPECIFICATION FOR FLAT FIBER-CEMENT SHEETS.
3. ASTM E-84 - STANDARD TEST FOR SURFACE BURNING CHARACTERISTICS OF BUILDING MATERIALS.
4. ASTM E 119 - STANDARD TEST METHODS FOR FIRE TESTS OF BUILDING CONSTRUCTION AND MATERIALS.
5. ASTM E 228 - STANDARD TEST METHOD FOR LINEAR THERMAL EXPANSION OF SOLID MATERIALS WITH A VITREOUS SILICA DILATOMETER.
6. ASTM E 330 - STANDARD TEST METHOD FOR STRUCTURAL PERFORMANCE OF EXTERIOR WINDOWS, CURTAIN WALLS, AND DOORS BY UNIFORM STATIC AIR PRESSURE DIFFERENCE.
7. ASTM E 331 - STANDARD TEST METHOD FOR WATER PENETRATION OF EXTERIOR WINDOWS, CURTAIN WALLS, AND DOORS BY UNIFORM STATIC AIR PRESSURE DIFFERENCE.
8. ASTM G 23 - STANDARD PRACTICE FOR OPERATING LIGHT-EXPOSURE APPARATUS (CARBON-ARC TYPE) WITH AND WITHOUT WATER FOR EXPOSURE OF NONMETALLIC MATERIALS, REPLACED BY G152 AND G153.
C. FLORIDA BUILDING CODE - TEST PROTOCOL HVHZ
1. TESTING APPLICATION STANDARD (TAS) 201, 202, 203 - IMPACT TEST PROCEDURES
D. NATIONAL FIRE PROTECTION ASSOCIATION (NFPA):
1. NFPA 285 - FIRE TEST METHOD FOR EXTERIOR WALL ASSEMBLIES CONTAINING COMBUSTIBLE MATERIAL.
2. NFPA 268 - IGNITION RESISTANCE OF EXTERIOR WALL ASSEMBLIES.

1.4 SUBMITTALS

A. PRODUCT DATA: SUBMIT MANUFACTURER'S PRODUCT DESCRIPTION, STORAGE AND HANDLING REQUIREMENTS, AND INSTALLATION INSTRUCTIONS.
B. PRODUCT TEST REPORTS AND CODE COMPLIANCE: DOCUMENTS DEMONSTRATING PRODUCT COMPLIANCE WITH LOCAL BUILDING CODE, SUCH AS TEST REPORTS OR EVALUATION REPORTS FROM QUALIFIED, INDEPENDENT TESTING AGENCIES.
C. MANUFACTURER'S DETAILS: SUBMIT DRAWINGS (.DWG, .RVT, AND/OR .PDF FORMATS), INCLUDING PLANS, SECTIONS, SHOWING INSTALLATION DETAILS THAT DEMONSTRATE PRODUCT DIMENSIONS, EDGE/TERMINATION CONDITIONS/TREATMENTS, COMPRESSION AND CONTROL JOINTS, CORNERS, OPENINGS, AND PENETRATIONS.
D. SAMPLES: VERIFY IF REQUIRED BY OWNER OR ARCHITECT. IF REQUIRED, SUBMIT SAMPLES OF EACH PRODUCT TYPE PROPOSED FOR USE.

1.5 QUALITY ASSURANCE

A. MANUFACTURER QUALIFICATIONS:
1. ALL FIBER CEMENT PANELS SPECIFIED IN THIS SECTION MUST BE SUPPLIED BY A MANUFACTURER WITH A MINIMUM OF 10 YEARS OF EXPERIENCE IN FABRICATING AND SUPPLYING FIBER CEMENT CLADDING SYSTEMS.
A. PRODUCTS COVERED UNDER THIS SECTION ARE TO BE MANUFACTURED IN AN ISO 9001 CERTIFIED FACILITY.
2. PROVIDE TECHNICAL AND DESIGN SUPPORT AS NEEDED REGARDING INSTALLATION REQUIREMENTS AND WARRANTY COMPLIANCE PROVISIONS.
B. INSTALLER QUALIFICATIONS: ALL PRODUCTS LISTED IN THIS SECTION ARE TO BE INSTALLED BY A SINGLE INSTALLER TRAINED BY MANUFACTURER OR REPRESENTATIVE.
C. MOCK-UP WALL: VERIFY IF REQUIRED BY OWNER OR ARCHITECT. IF REQUIRED, PROVIDE A MOCK-UP WALL AS EVALUATION TOOL FOR PRODUCT AND INSTALLATION WORKMANSHIP.
D. PRE-INSTALLATION MEETINGS: PRIOR TO BEGINNING INSTALLATION, CONDUCT CONFERENCE TO VERIFY AND DISCUSS SUBSTRATE CONDITIONS, MANUFACTURER'S INSTALLATION INSTRUCTIONS AND WARRANTY REQUIREMENTS, AND PROJECT REQUIREMENTS.

1.6 DELIVERY, STORAGE, AND HANDLING

A. PANELS MUST BE STORED FLAT AND KEPT DRY BEFORE INSTALLATION. A WATERPROOF COVER OVER PANELS AND ACCESSORIES SHOULD BE USED AT ALL TIMES PRIOR TO INSTALLATION.
B. IF PANELS ARE EXPOSED TO WATER OR WATER VAPOR PRIOR TO INSTALLATION, ALLOW TO COMPLETELY DRY BEFORE INSTALLING. FAILURE TO DO SO MAY RESULT IN PANEL SHRINKAGE AT SHIP LAP JOINTS, AND SUCH ACTION MAY VOID WARRANTY.
C. PANELS MUST BE CARRIED ON EDGE. DO NOT CARRY OR LIFT PANELS FLAT. IMPROPER HANDLING MAY CAUSE CRACKING OR PANEL DAMAGE.
D. DIRECT CONTACT BETWEEN THE PANELS AND THE GROUND SHOULD BE AVOIDED AT ALL TIMES. IT IS NECESSARY TO KEEP PANELS CLEAN DURING INSTALLATION PROCESS.

1.7 WARRANTY

A. PROVIDE MANUFACTURER'S 50-YEAR WARRANTY AGAINST MANUFACTURED DEFECTS IN FIBER CEMENT PANELS.
B. PROVIDE MANUFACTURER'S 15-YEAR WARRANTY AGAINST MANUFACTURED DEFECTS IN PANEL FINISH.
C. WARRANTY PROVIDES FOR THE ORIGINAL PURCHASER. SEE WARRANTY FOR DETAILED INFORMATION ON TERMS, CONDITIONS AND LIMITATIONS.

PART II: PRODUCTS

2.1 MANUFACTURERS

A. ACCEPTABLE MANUFACTURER: NICHIHA CORPORATION, 18-19 NISHIKI 2-CHOME NAKA-KU, NAGOYA, AICHI 460-8610, JAPAN.
B. ACCEPTABLE MANUFACTURER'S REPRESENTATIVE: NICHIHA USA, INC., 6465 E. JOHNS CROSSING, SUITE 250, JOHNS CREEK, GA 30097. TOLL FREE: 1.866.424.4421, OFFICE: 770.805.9466, FAX: 770.805.9467, WWW.NICHIHA.COM.
1. BASIS OF DESIGN PRODUCT: NICHIHA VINTAGEWOOD.
A. PROFILE COLORS: BARK, CEDAR.
B. PROFILES: WOOD PLANK TEXTURE WITH THREE, 3/8" GROOVES RUNNING LENGTHWISE, SPACED 5-5/8" APART.
C. ACCESSORY/COMPONENT OPTIONS:
I. MANUFACTURED CORNERS WITH 3-1/2" RETURNS FOR EACH PROFILE COLOR.
II. ALUMINUM TRIM TO BE PAINTED PER FINISH SCHEDULE: OUTSIDE CORNERS (CORNER KEY, OPEN OUTSIDE CORNER), VERTICAL JOINTS (H-MOLD), TERMINATIONS (J-MOLD)
III. ESSENTIAL FLASHING SYSTEM: STARTER, COMPRESSION JOINT, OVERHANG.
D. DIMENSIONS - AWP-3030: 455MM (17-7/8") (H) X 3,030 MM (119-5/16") (L).
E. PANEL THICKNESS: 16 MM (5/8").
F. WEIGHT: 57.32 LBS. PER PANEL.
G. COVERAGE: 14.81 SQ. FT. PER PANEL.
H. FACTORY SEALED ON SIX [6] SIDES.
C. SUBSTITUTIONS: NOT PERMITTED.

2.2 MATERIALS

A. FIBER CEMENT PANELS MANUFACTURED FROM A PRESSED, STAMPED, AND AUTOCLAVED MIX OF PORTLAND CEMENT, FLY ASH, SILICA, RECYCLED REJECTS, AND WOOD FIBER BUNDLES.
B. PANEL SURFACE PRE-FINISHED AND MACHINE APPLIED.
C. PANELS PROFILED ALONG ALL FOUR EDGES, SUCH THAT BOTH HORIZONTAL AND VERTICAL JOINTS BETWEEN THE INSTALLED PANELS ARE SHIP-LAPPED.
D. FACTORY-APPLIED SEALANT GASKET ADDED TO TOP AND RIGHT PANEL EDGES; ALL JOINTS CONTAIN A FACTORY SEALANT.

2.3 PERFORMANCE REQUIREMENTS:

A. FIBER CEMENT CLADDING - MUST COMPLY WITH ASTM C-1186, TYPE A, GRADE II REQUIREMENTS:
1. WET FLEXURAL STRENGTH, LOWER LIMIT: 1015 PSI.
2. WATER TIGHTNESS: NO WATER DROPLETS OBSERVED ON ANY SPECIMEN.
3. FREEZE-THAW: NO DAMAGE OR DEFECTS OBSERVED.
4. WARM WATER: NO EVIDENCE OF CRACKING, DELAMINATION, SWELLING, OR OTHER DEFECTS OBSERVED.
5. HEAT-RAIN: NO CRAZING, CRACKING, OR OTHER DELETERIOUS EFFECTS, SURFACE OR JOINT CHANGES OBSERVED IN ANY SPECIMEN.
B. MEAN COEFFICIENT OF LINEAR THERMAL EXPANSION (ASTM E-228): MAX 1.0*10^-5 IN./IN. F.
C. SURFACE BURNING (CAN-ULC S102/ASTM E-84): FLAME SPREAD: 0, SMOKE DEVELOPED: 5.
D. WIND LOAD (ASTM E-330): CONTACT MANUFACTURER FOR ULTIMATE TEST PRESSURE DATA CORRESPONDING TO FRAMING TYPE, DIMENSIONS, FASTENER TYPE, AND ATTACHMENT CLIPS. PROJECT ENGINEER(S) MUST DETERMINE ZONE 4 AND 5 DESIGN PRESSURES BASED ON PROJECT SPECIFICS.
1. MINIMUM LATERAL DEFLECTION: L/120.
E. WATER PENETRATION (ASTM E-331): NO WATER LEAKAGE OBSERVED INTO WALL CAVITY.
F. WEATHER RESISTANT (ASTM G-23): NO CRACKING, CHECKING, CRAZING, EROSION, OR OTHER DETRIMENTAL EFFECTS OBSERVED.
G. STEADY-STATE HEAT FLUX AND THERMAL TRANSMISSION PROPERTIES TEST (ASTM C-518): THERMAL RESISTANCE R VALUE OF 1.23.
H. FIRE RESISTANT (ASTM E-119): THE WALL ASSEMBLY MUST SUCCESSFULLY ENDURE 60-MINUTE FIRE EXPOSURE WITHOUT DEVELOPING EXCESSIVE UNEXPOSED SURFACE TEMPERATURE OR ALLOWING FLAMING ON THE UNEXPOSED SIDE OF THE ASSEMBLY.
I. IGNITION RESISTANCE (NFPA 268): NO SUSTAINED FLAMING OF PANELS, ASSEMBLY WHEN SUBJECTED TO A MINIMUM RADIANT HEAT FLUX OF 12.5 KW/M2 ± 5% IN THE PRESENCE OF A PILOT IGNITION SOURCE FOR A 20-MINUTE PERIOD.
J. FIRE PROPAGATION (NFPA 285): WALL ASSEMBLY OF NICHIHA AWP, ULTIMATE CLIPS AND STARTER TRACK, TYVEK COMMERCIAL WRAP, ½" DENSGLASS GOLD SHEATHING, 16" O.C. 18 GAUGE STEEL STUDS, MINERAL WOOL IN-CAVITY INSULATION, AND INTERIOR 5/8" TYPE X GYPSUM MET THE ACCEPTANCE CRITERIA OF NFPA 285.
K. FIRE PROPAGATION (CAN/ULC S-134): WALL ASSEMBLY OF NICHIHA AWP, ULTIMATE CLIPS AND STARTER TRACK, TYVEK HOUSEWRAP, 5/8" FRT PLYWOOD, 16" O.C. 2X WOOD STUDS, FIBERGLASS IN-CAVITY INSULATION, AND INTERIOR 5/8" TYPE X GYPSUM MET THE ACCEPTANCE CRITERIA OF CAN/ULC S-134.
L. DRAINED AND BACK VENTILATED RAINSCREEN (AAMA 509-09): SYSTEM MUST PASS ALL COMPONENT TESTS.
M. FLORIDA BUILDING CODE - TEST PROTOCOL HVHZ (TAS 201, 202, 203): PASSED.

2.4 INSTALLATION COMPONENTS

A. ULTIMATE CLIP SYSTEM:
1. STARTER TRACK:
A. HORIZONTAL PANEL INSTALLATIONS - FA 700 - 3,030MM (L) GALVALUME.
B. VERTICAL PANEL INSTALLATIONS (AWP-3030 ONLY) - FA 710T - 3,030MM (L) GALVALUME.
2. PANEL CLIPS: JEL 777 "ULTIMATE CLIP" (10MM RAINSCREEN FOR 16MM AWP) - ZINC-ALUMINUM-MAGNESIUM ALLOY COATED STEEL.
A. JOINT TAB ATTACHMENTS (INCLUDED) - USED AT ALL AWP-1818 PANEL TO PANEL VERTICAL JOINTS - NOT USED WITH AWP-3030 INSTALLATIONS.
3. SINGLE FLANGE SEALANT BACKER - FHK 1017 (10MM) - 6.5' (L) FLUORINE COATED GALVALUME.
4. DOUBLE FLANGE SEALANT BACKER - FH 1020 (10MM) - 10' (L) FLUORINE COATED GALVALUME.
5. CORRUGATED SPACER - FS 1005 (5MM), FS 1010 (10MM) - 4' (L).
6. FINISH CLIP (OPTIONAL) - JE310 (5MM)
B. ALUMINUM TRIM (OPTIONAL): PAINT AS SPECIFIED IN FINISH SCHEDULE.
C. ESSENTIAL FLASHING SYSTEM (OPTIONAL):
1. STARTER - MAIN SEGMENTS (3,030MM), INSIDE CORNERS, OUTSIDE CORNERS
2. COMPRESSION JOINT - MAIN SEGMENTS (3,030MM)
3. OVERHANG - MAIN SEGMENTS (3,030MM), INSIDE CORNERS, OUTSIDE CORNERS, JOINT CLIPS
D. FASTENERS: CORROSION RESISTANT FASTENERS, SUCH AS HOT-DIPPED GALVANIZED SCREWS APPROPRIATE TO LOCAL BUILDING CODES AND PRACTICES MUST BE USED. USE STAINLESS STEEL FASTENERS IN HIGH HUMIDITY AND HIGH-MOISTURE REGIONS. PANEL MANUFACTURER IS NOT LIABLE FOR CORROSION RESISTANCE OF FASTENERS. DO NOT USE ALUMINUM FASTENERS, STAPLES OR FASTENERS THAT ARE NOT RATED OR DESIGNED FOR INTENDED USE. SEE MANUFACTURER'S INSTRUCTIONS FOR APPROPRIATE FASTENERS FOR CONSTRUCTION METHOD USED.
E. FLASHING: FLASH ALL AREAS SPECIFIED IN MANUFACTURER'S INSTRUCTIONS. DO NOT USE RAW ALUMINUM FLASHING. FLASHING MUST BE GALVANIZED, ANODIZED, OR PVC COATED.
F. SEALANT: SEALANT SHALL COMPLY WITH ASTM C920.

PART III: EXECUTION

3.1 EXAMINATION

A. VERIFICATION OF CONDITIONS:
1. FIBER CEMENT PANELS CAN BE INSTALLED OVER BRACED WOOD, STEEL STUDS AND SHEATHING INCLUDING PLYWOOD, OSB, PLASTIC FOAM OR FIBERBOARD SHEATHING. FIBER CEMENT PANELS CAN ALSO BE INSTALLED OVER STRUCTURAL INSULATED PANELS (SIP'S), CONCRETE MASONRY UNITS (CMU'S) AND CONCRETE BLOCK STRUCTURES (CBS'S) WITH FURRING STRIPS, AND PRE-ENGINEERED METAL CONSTRUCTION. INSULATED CONCRETE FORMS (ICFS) ARE NOT AN APPROVED SUBSTRATE UNDER ANY CONDITION.
2. ALLOWABLE STUD SPACING: 16" O.C. MAXIMUM.
3. A WEATHER RESISTIVE BARRIER IS REQUIRED WHEN INSTALLING FIBER CEMENT PANELS. USE AN APPROVED WEATHER RESISTIVE BARRIER (WRB) AS DEFINED BY THE 2015 IBC OR IRC. REFER TO LOCAL BUILDING CODES.
4. APPROPRIATE METAL FLASHING SHOULD BE USED TO PREVENT MOISTURE PENETRATION AROUND ALL DOORS, WINDOWS, WALL BOTTOMS, MATERIAL TRANSITIONS AND PENETRATIONS. REFER TO LOCAL BUILDING CODES FOR BEST PRACTICES.
B. EXAMINE SITE TO ENSURE SUBSTRATE CONDITIONS ARE WITHIN SPECIFICATION FOR PROPER INSTALLATION.
C. DO NOT BEGIN INSTALLATION UNTIL UNACCEPTABLE CONDITIONS HAVE BEEN CORRECTED.
D. DO NOT INSTALL PANELS OR COMPONENTS THAT APPEAR TO BE DAMAGED OR DEFECTIVE. DO NOT INSTALL WET PANELS.

3.2 INSTALLATION

A. GENERAL: INSTALL PRODUCTS IN ACCORDANCE WITH THE LATEST INSTALLATION GUIDELINES OF THE MANUFACTURER AND ALL APPLICABLE BUILDING CODES AND OTHER LAWS, RULES, REGULATIONS AND ORDINANCES. REVIEW ALL MANUFACTURER INSTALLATION, MAINTENANCE INSTRUCTIONS, AND OTHER APPLICABLE DOCUMENTS BEFORE INSTALLATION.
1. CONSULT WITH YOUR LOCAL DEALER OR NICHIHA TECHNICAL DEPARTMENT BEFORE INSTALLING ANY NICHIHA FIBER CEMENT PRODUCT ON A BUILDING HIGHER THAN 45 FEET OR THREE STORIES OR FOR CONDITIONS NOT MATCHING PRESCRIBED STANDARD INSTALLATION GUIDE REQUIREMENTS AND METHODS. SPECIAL INSTALLATION CONDITIONS MAY BE REQUIRED VIA A TECHNICAL REVIEW AND SPECIAL APPLICATIONS FORM (SAF) PROCESS.
2. VERTICAL CONTROL/EXPANSION JOINTS ARE REQUIRED WITHIN 2-10 FEET OF OUTSIDE CORNERS FINISHED WITH METAL TRIM AND APPROXIMATELY EVERY 30 FEET THEREAFTER.
3. HORIZONTAL/COMPRESSION JOINTS ARE REQUIRED FOR MULTI-STORY INSTALLATIONS OF AWP. LOCATE JOINTS AT FLOOR LINES. JOINTS ARE FLASHED MINIMUM 1/2" BREAKS. DO NOT CAULK. REFER TO INSTALLATION GUIDE(S).
A. WOOD FRAMED BUILDINGS OF THREE OR MORE FLOORS REQUIRE A COMPRESSION JOINT AT EACH FLOOR.
B. STEEL FRAMED BUILDINGS (INCLUDING REINFORCED CONCRETE CORE WITH LGMF EXTERIOR WALLS) OF MORE THAN THREE FLOORS (OR 45 FEET) REQUIRE A COMPRESSION JOINT EVERY 25 FEET AT A FLOOR LINE.
B. PANEL CUTTING
1. ALWAYS CUT FIBER CEMENT PANELS OUTSIDE OR IN A WELL VENTILATED AREA. DO NOT CUT THE PRODUCTS IN AN ENCLOSED AREA.
2. ALWAYS WEAR SAFETY GLASSES AND NIOSH/OSHA APPROVED RESPIRATOR WHENEVER CUTTING, DRILLING, SAWING, SANDING OR ABRADING THE PRODUCTS. REFER TO MANUFACTURER SDS FOR MORE INFORMATION.
3. USE A DUST-REDUCING CIRCULAR SAW WITH A DIAMOND-TIPPED OR CARBIDE-TIPPED BLADE.
A. RECOMMENDED CIRCULAR SAW: MAKITA 7-1/4" CIRCULAR SAW WITH DUST COLLECTOR (#5057KB).
B. RECOMMENDED BLADE: TENRYU BOARD-PRO PLUS PCD BLADE (#BP-18505).
C. SHEARS (ELECTRIC OR PNEUMATIC) OR JIG SAW CAN BE USED FOR COMPLICATED CUTTINGS, SUCH AS SERVICE OPENINGS, CURVES, RADII AND SCROLLWORK.
4. SILICA DUST WARNING: FIBER CEMENT PRODUCTS MAY CONTAIN SOME AMOUNTS OF CRYSTALLINE SILICA, A NATURALLY OCCURRING, POTENTIALLY HAZARDOUS MINERAL WHEN AIRBORNE IN DUST FORM. CONSULT PRODUCT SDS OR VISIT HTTPS://WWW.OSHA.GOV/DSG/TOPICS/SILICACRYSTALLINE/.

3.3 CLEANING AND MAINTENANCE

A. REVIEW MANUFACTURER GUIDELINES FOR DETAILED CARE INSTRUCTIONS.

END OF SECTION 07423

SECTION 07500 - SINGLE-PLY ROOFING (TPO)

PART 1 - GENERAL

1.1 SECTION REQUIREMENTS

A. THERMOPLASTIC MEMBRANE ROOFING SYSTEM, INCLUDING ALL COMPONENTS SPECIFIED.
B. COMPLY WITH THE PUBLISHED RECOMMENDATIONS AND INSTRUCTIONS OF THE ROOFING MEMBRANE MANUFACTURER, AT HTTP://MANUAL.FSBP.COM.
C. COMMENCEMENT OF WORK BY CONTRACTOR SHALL CONSTITUTE ACKNOWLEDGEMENT BY CONTRACTOR THAT THIS SPECIFICATION CAN BE SATISFACTORILY EXECUTED, UNDER THE PROJECT CONDITIONS AND WITH ALL NECESSARY PREREQUISITES FOR WARRANTY ACCEPTANCE BY ROOFING MEMBRANE MANUFACTURER. NO MODIFICATION OF THE CONTRACT SUM WILL BE MADE FOR FAILURE TO ADEQUATELY EXAMINE THE CONTRACT DOCUMENTS OR THE PROJECT CONDITIONS.

1.2 RELATED REQUIREMENTS

A. SECTION 06100 - ROUGH CARPENTRY: WOOD NAILERS ASSOCIATED WITH ROOFING AND ROOF INSULATION.

1.3 REFERENCE STANDARDS

A. ASTM C1177/C1177M - STANDARD SPECIFICATION FOR GLASS MAT GYPSUM SUBSTRATE FOR USE AS SHEATHING; 2013.
B. ASTM C1289 - STANDARD SPECIFICATION FOR FACED RIGID CELLULAR POLYISOCYANURATE THERMAL INSULATION BOARD; 2014.
C. ASTM C1549 - STANDARD TEST METHOD FOR DETERMINATION OF SOLAR REFLECTANCE NEAR AMBIENT TEMPERATURE USING A PORTABLE SOLAR REFLECTOMETER; 2009 (REAPPROVED 2014).
D. ASTM D638 - STANDARD TEST METHOD FOR TENSILE PROPERTIES OF PLASTICS; 2010.
E. ASTM D1004 - STANDARD TEST METHOD FOR TEAR RESISTANCE (GRAVES TEAR) OF PLASTIC FILM AND SHEETING; 2013.
F. ASTM D6878/D6878M - STANDARD SPECIFICATION FOR THERMOPLASTIC POLYOLEFIN BASED SHEET ROOFING; 2013.
G. FM DS 1-28 - WIND DESIGN; FACTORY MUTUAL SYSTEM; 2007.
H. FM DS 1-29 - ROOF DECK SECUREMENT AND ABOVE-DECK ROOF COMPONENTS; FACTORY MUTUAL SYSTEM; 2006.
I. PS 1 - STRUCTURAL PLYWOOD; 2009.
J. PS 20 - AMERICAN SOFTWOOD LUMBER STANDARD; 2010.
K. SPRI ES-1 - WIND DESIGN STANDARD FOR EDGE SYSTEMS USED WITH LOW SLOPE ROOFING SYSTEMS; 2011. (ANSI/SPRI/FM 4435/ES-1)

1.4 SUBMITTALS

A. PRODUCT DATA:
1. PROVIDE MEMBRANE MANUFACTURER'S PRINTED DATA SUFFICIENT TO SHOW THAT ALL COMPONENTS OF ROOFING SYSTEM, INCLUDING INSULATION AND FASTENERS, COMPLY WITH THE SPECIFIED REQUIREMENTS AND WITH THE MEMBRANE MANUFACTURER'S REQUIREMENTS AND RECOMMENDATIONS FOR THE SYSTEM TYPE SPECIFIED; INCLUDE DATA FOR EACH PRODUCT USED IN CONJUNCTION WITH ROOFING MEMBRANE.
B. SAMPLES: SUBMIT SAMPLES OF EACH PRODUCT TO BE USED.
C. SHOP DRAWINGS: PROVIDE:
1. THE ROOF MEMBRANE MANUFACTURER'S STANDARD DETAILS CUSTOMIZED FOR THIS PROJECT FOR ALL RELEVANT CONDITIONS, INCLUDING FLASHINGS, BASE TIE-INS, ROOF EDGES, TERMINATIONS, EXPANSION JOINTS, PENETRATIONS, AND DRAINS.

1.5 QUALITY ASSURANCE

A. INSTALLER QUALIFICATIONS: ROOFING INSTALLER SHALL HAVE THE FOLLOWING:
1. CURRENT FIRESTONE RED SHIELD LICENSED CONTRACTOR STATUS.

1.6 DELIVERY, STORAGE AND HANDLING

A. DELIVER PRODUCTS IN MANUFACTURER'S ORIGINAL CONTAINERS, DRY AND UNDAMAGED, WITH SEALS AND LABELS INTACT AND LEGIBLE.
B. STORE MATERIALS CLEAR OF GROUND AND MOISTURE WITH WEATHER PROTECTIVE COVERING.
C. KEEP COMBUSTIBLE MATERIALS AWAY FROM IGNITION SOURCES.

PART 2 - PRODUCTS

2.1 MANUFACTURERS

A. ACCEPTABLE MANUFACTURER - ROOFING SYSTEM: FIRESTONE BUILDING PRODUCTS LLC, CARMEL, IN: WWW.FIRESTONEBPCO.COM.
B. MANUFACTURER OF INSULATION AND COVER BOARDS: SAME MANUFACTURER AS ROOF MEMBRANE (WHERE REQUIRED).
C. MANUFACTURER OF METAL ROOF EDGING: SAME MANUFACTURER AS ROOF MEMBRANE.
1. FACTORY FABRICATED PRODUCTS MANUFACTURED BY THE COMPANIES LISTED BELOW ARE ACCEPTABLE PROVIDED THEY ARE COMPLETELY EQUIVALENT IN MATERIALS AND PERFORMANCE:
a. METAL ERA.

2.2 ROOFING SYSTEM DESCRIPTION

A. ROOFING SYSTEM: THERMOPLASTIC POLYOLEFIN (TPO) SINGLE-PLY MEMBRANE.
1. MEMBRANE ATTACHMENT: MECHANICALLY FASTENED.
2. WARRANTY: FULL SYSTEM WARRANTY; FIRESTONE 20 YEAR RED SHIELD LIMITED WARRANTY COVERING MEMBRANE, ROOF INSULATION, AND MEMBRANE ACCESSORIES.
3. COMPLY WITH APPLICABLE LOCAL BUILDING CODE REQUIREMENTS - FLORIDA PRODUCT APPROVAL FL 10264 R-12 SYSTEM SC 197
4. PROVIDE ASSEMBLY HAVING UNDERWRITERS LABORATORIES, INC. (UL) CLASS A FIRE HAZARD CLASSIFICATION.
5. PROVIDE ASSEMBLY COMPLYING WITH FACTORY MUTUAL CORPORATION (FM) ROOF ASSEMBLY CLASSIFICATION, FM DS 1-28 AND 1-29, AND MEETING MINIMUM REQUIREMENTS OF FM 1-90 WIND UPLIFT RATING.
B. ROOFING SYSTEM COMPONENTS: LISTED IN ORDER FROM THE TOP OF THE ROOF DOWN:
1. MEMBRANE: THICKNESS AS SPECIFIED.
2. INSULATION COVER BOARD: NOT REQUIRED.
3. INSULATION:
a. MAXIMUM BOARD THICKNESS: 3.3 INCHES; USE AS MANY LAYERS AS NECESSARY; STAGGER JOINTS IN ADJACENT LAYERS.
b. TOTAL R-VALUE OF 25, MINIMUM.
c. BOTTOM LAYER: POLYISOCYANURATE FOAM BOARD, NON-COMPOSITE; LOOSE-LAID, NO ATTACHMENT.
d. CRICKETS: TAPERED INSULATION OF SAME TYPE AS SPECIFIED FOR TOP LAYER; SLOPE AS INDICATED.

2.3 MEMBRANE MATERIALS

A. MEMBRANE: FLEXIBLE, HEAT WELDABLE SHEET COMPOSED OF THERMOPLASTIC POLYOLEFIN POLYMER AND ETHYLENE PROPYLENE RUBBER; COMPLYING WITH ASTM D6878/D6878M, WITH POLYESTER WEFT INSERTED REINFORCEMENT AND THE FOLLOWING ADDITIONAL CHARACTERISTICS:
1. THICKNESS: 0.060 INCH (1.52 MM) PLUS/MINUS 10 PERCENT, WITH COATING THICKNESS OVER REINFORCEMENT OF 0.024 INCH (0.61 MM) PLUS/MINUS 10 PERCENT.
2. COLOR: WHITE (FIELD OF ROOF AREA)
3. COLOR: TAN (PARAPET WALL AREAS)
4. ACCEPTABLE PRODUCT: ULTRAPLY TPO BY FIRESTONE.
B. MEMBRANE FASTENERS: TYPE AND SIZE AS REQUIRED BY ROOF MEMBRANE MANUFACTURER FOR ROOFING SYSTEM AND WARRANTY TO BE PROVIDED; USE ONLY FASTENERS FURNISHED BY ROOF MEMBRANE MANUFACTURER.
C. CURB AND PARAPET FLASHING: SAME MATERIAL AS MEMBRANE (TAN IN COLOR), WITH ENCAPSULATED EDGE WHICH ELIMINATES NEED FOR SEAM SEALING THE FLASHING-TO-ROOF SPLICE.
D. FORMABLE FLASHING: NON-REINFORCED, FLEXIBLE, HEAT WELDABLE SHEET, COMPOSED OF THERMOPLASTIC POLYOLEFIN POLYMER AND ETHYLENE PROPYLENE RUBBER.
1. THICKNESS: 0.060 INCH (1.52 MM) PLUS/MINUS 10 PERCENT.
2. COLOR: WHITE.
3. ACCEPTABLE PRODUCT: ULTRAPLY TPO FLASHING BY FIRESTONE.
E. TAPE FLASHING: 5-1/2 INCH (140 MM) NOMINAL WIDE TPO MEMBRANE LAMINATED TO CURED RUBBER POLYMER SEAMING TAPE, OVERALL THICKNESS 0.065 INCH (1.6 MM) NOMINAL; TPO QUICKSEAM FLASHING BY FIRESTONE.
F. BONDING ADHESIVE: NEOPRENE AND SBR RUBBER BLEND, FORMULATED FOR COMPATIBILITY WITH THE MEMBRANE OTHER SUBSTRATE MATERIALS, INCLUDING MASONRY, WOOD, AND INSULATION FACINGS; ULTRAPLY BONDING ADHESIVE BY FIRESTONE.
G. POURABLE SEALER: TWO-PART POLYURETHANE, TWO-COLOR FOR RELIABLE MIXING; POURABLE SEALER BY FIRESTONE.
H. SEAM PLATES: STEEL WITH BARBS AND GALVALUME COATING; CORROSION-RESISTANCE COMPLYING WITH FM 4470; HEAVY DUTY SEAM PLATES BY FIRESTONE.
I. TERMINATION BARS: ALUMINUM BARS WITH INTEGRAL CAULK LEDGE; 1.3 INCHES (33 MM) WIDE BY 0.10 INCH (2.5 MM) THICK; FIRESTONE TERMINATION BAR BY FIRESTONE.
J. CUT EDGE SEALANT: SYNTHETIC RUBBER-BASED, FOR USE WHERE MEMBRANE REINFORCEMENT IS EXPOSED; ULTRAPLY TPO CUT EDGE SEALANT BY FIRESTONE.
K. GENERAL PURPOSE SEALANT: EPDM-BASED, ONE PART, WHITE GENERAL PURPOSE SEALANT; ULTRAPLY TPO GENERAL PURPOSE SEALANT BY FIRESTONE.
L. COATED METAL FLASHING AND EDGINGS: GALVANIZED STEEL WITH ROOFING MANUFACTURER'S BONDED TPO COATING; ULTRAPLY TPO COATED METAL BY FIRESTONE.
M. MOLDED FLASHING ACCESSORIES: UNREINFORCED TPO MEMBRANE PRE-MOLDED TO SUIT A VARIETY OF FLASHING DETAILS, INCLUDING PIPE BOOTS, INSIDE CORNERS, OUTSIDE CORNERS, ETC.; ULTRAPLY TPO SMALL AND LARGE PIPE FLASHING BY FIRESTONE.
N. WATER BLOCK SEAL: BUTYL RUBBER SEALANT FOR USE BETWEEN TWO SURFACES, NOT EXPOSED; WATER BLOCK SEAL BY FIRESTONE.
O. ROOF WALKWAY PADS: NON-REINFORCED TPO WALKWAY PADS, 0.130 INCH (3 MM) BY 30 INCHES (760 MM) BY 40 FEET (12.19 M) LONG WITH PATTERNED TRAFFIC BEARING SURFACE; ULTRAPLY TPO WALKWAY PADS BY FIRESTONE.

2.4 ROOF INSULATION AND COVER BOARDS

A. POLYISOCYANURATE BOARD INSULATION: CLOSED CELL POLYISOCYANURATE FOAM WITH BLACK GLASS REINFORCED MAT LAMINATED TO FACES, COMPLYING WITH ASTM C1289 TYPE II CLASS 1, WITH THE FOLLOWING ADDITIONAL CHARACTERISTICS:
1. SIZE: 48 INCHES (1220 MM) BY 96 INCHES (2440 MM), NOMINAL.
2. R-VALUE (RSI-VALUE) (LTTR):
a. 3.3 INCH THICKNESS: R=25 MINIMUM
3. COMPRESSIVE STRENGTH: 20 PSI (138 KPA) WHEN TESTED IN ACCORDANCE WITH ASTM C1289.
4. ACCEPTABLE PRODUCT: ISO 95+ GL POLYISOCYANURATE INSULATION BY FIRESTONE.
B. GYPSUM-BASED COVER BOARD: NOT REQUIRED
1. INSULATION FASTENERS: TYPE AND SIZE AS REQUIRED BY ROOF MEMBRANE MANUFACTURER FOR ROOFING SYSTEM AND WARRANTY TO BE PROVIDED; USE ONLY FASTENERS FURNISHED BY ROOF MEMBRANE MANUFACTURER: HEAVY DUTY FASTENERS BY FIRESTONE.

2.5 METAL ACCESSORIES

A. METAL ROOF EDGING AND FASCIA: CONTINUOUS METAL EDGE MEMBER SERVING AS TERMINATION OF ROOF MEMBRANE AND RETAINER FOR METAL FASCIA; WATERTIGHT WITH NO EXPOSED FASTENERS; MOUNTED TO ROOF EDGE NAILER. METAL ERA PERMATITE SYSTEM 200 FASCIA
1. WIND PERFORMANCE:
a. MEMBRANE PULL-OFF RESISTANCE: 100 LBS/FT (1460 N/M), MINIMUM, WHEN TESTED IN ACCORDANCE WITH ANSI/SPRI/FM 4435/ES-1 TEST METHOD RE-1, CURRENT EDITION.
2. DESCRIPTION: TWO-PIECE; EXTRUDED ALUMINUM T-SHAPED EDGE MEMBER SECURING TOP AND BOTTOM EDGES OF FLAT-FACED FORMED METAL FASCIA; METAL ERA .
3. FASCIA MATERIAL AND FINISH: 24 GAGE, 0.024 INCH (0.06 MM) GALVANIZED STEEL WITH KYNAR 500 FINISH IN MANUFACTURER'S STANDARD COLOR; MATCHING CONCEALED JOINT SPLICE PLATES; FACTORY-INSTALLED PROTECTIVE PLASTIC FILM.

2.6 ACCESSORY MATERIALS

A. WOOD NAILERS: PS 20 DIMENSION LUMBER, STRUCTURAL GRADE NO. 2 OR BETTER SOUTHERN PINE, DOUGLAS FIR; OR PS 1, APA EXTERIOR GRADE PLYWOOD; PRESSURE PRESERVATIVE TREATED.
1. WIDTH: 3-1/2 INCHES (90 MM), NOMINAL MINIMUM, OR AS WIDE AS THE NAILING FLANGE OF THE ROOF ACCESSORY TO BE ATTACHED TO IT.
2. THICKNESS: SAME AS THICKNESS OF ROOF INSULATION.

PART 3 - INSTALLATION

3.1 GENERAL

A. INSTALL ROOFING, INSULATION, FLASHINGS, AND ACCESSORIES IN ACCORDANCE WITH ROOFING MANUFACTURER'S PUBLISHED INSTRUCTIONS AND RECOMMENDATIONS FOR THE SPECIFIED ROOFING SYSTEM. WHERE MANUFACTURER PROVIDES NO INSTRUCTIONS OR RECOMMENDATIONS, FOLLOW GOOD ROOFING PRACTICES AND INDUSTRY STANDARDS. COMPLY WITH FEDERAL, STATE, AND LOCAL REGULATIONS.
B. OBTAIN ALL RELEVANT INSTRUCTIONS AND MAINTAIN COPIES AT PROJECT SITE FOR DURATION OF INSTALLATION PERIOD.
C. DO NOT START WORK UNTIL PRE-INSTALLATION NOTICE HAS BEEN SUBMITTED TO MANUFACTURER AS NOTIFICATION THAT THIS PROJECT REQUIRES A MANUFACTURER'S WARRANTY.
D. PERFORM WORK USING COMPETENT AND PROPERLY EQUIPPED PERSONNEL.
E. TEMPORARY CLOSURES, WHICH ENSURE THAT MOISTURE DOES NOT DAMAGE ANY COMPLETED SECTION OF THE NEW ROOFING SYSTEM, ARE THE RESPONSIBILITY OF THE APPLICATOR. COMPLETION OF FLASHINGS, TERMINATIONS, AND TEMPORARY CLOSURES SHALL BE COMPLETED AS REQUIRED TO PROVIDE A WATERTIGHT CONDITION.
F. INSTALL ROOFING MEMBRANE ONLY WHEN SURFACES ARE CLEAN, DRY, SMOOTH AND FREE OF SNOW OR ICE; DO NOT APPLY ROOFING MEMBRANE DURING INCLEMENT WEATHER OR WHEN AMBIENT CONDITIONS WILL NOT ALLOW PROPER APPLICATION; CONSULT MANUFACTURER FOR RECOMMENDED PROCEDURES DURING COLD WEATHER. DO NOT WORK WITH SEALANTS AND ADHESIVES WHEN MATERIAL TEMPERATURE IS OUTSIDE THE RANGE OF 60 TO 80 DEGREES F (15 TO 25 DEGREES C).
G. PROTECT ADJACENT CONSTRUCTION, PROPERTY, VEHICLES, AND PERSONS FROM DAMAGE RELATED TO ROOFING WORK; REPAIR OR RESTORE DAMAGE CAUSED BY ROOFING WORK.
1. PROTECT FROM SPILLS AND OVERSPRAY FROM BITUMEN, ADHESIVES, SEALANTS AND COATINGS.
2. PARTICULARLY PROTECT METAL, GLASS, PLASTIC, AND PAINTED SURFACES FROM BITUMEN, ADHESIVES, AND SEALANTS WITHIN THE RANGE OF WIND-BORNE OVERSPRAY.
3. PROTECT FINISHED AREAS OF THE ROOFING SYSTEM FROM ROOFING RELATED WORK TRAFFIC AND TRAFFIC BY OTHER TRADES.
H. UNTIL READY FOR USE, KEEP MATERIALS IN THEIR ORIGINAL CONTAINERS AS LABELED BY THE MANUFACTURER.
I. CONSULT MEMBRANE MANUFACTURER'S INSTRUCTIONS, CONTAINER LABELS, AND MATERIAL SAFETY DATA SHEETS (MSDS) FOR SPECIFIC SAFETY INSTRUCTIONS. KEEP ALL ADHESIVES, SEALANTS, PRIMERS AND CLEANING MATERIALS AWAY FROM ALL SOURCES OF IGNITION.

3.2 EXAMINATION

A. EXAMINE ROOF DECK TO DETERMINE THAT IT IS SUFFICIENTLY RIGID TO SUPPORT INSTALLERS AND THEIR MECHANICAL EQUIPMENT AND THAT DEFLECTION WILL NOT STRAIN OR RUPTURE ROOF COMPONENTS OR DEFORM DECK.
B. VERIFY THAT SURFACES AND SITE CONDITIONS ARE READY TO RECEIVE WORK. CORRECT DEFECTS IN THE SUBSTRATE BEFORE COMMENCING WITH ROOFING WORK.
C. EXAMINE ROOF SUBSTRATE TO VERIFY THAT IT IS PROPERLY SLOPED TO DRAINS.
D. VERIFY THAT THE SPECIFICATIONS AND DRAWING DETAILS ARE WORKABLE AND NOT IN CONFLICT WITH THE ROOFING MANUFACTURER'S RECOMMENDATIONS AND INSTRUCTIONS; START OF WORK CONSTITUTES ACCEPTABLE OF PROJECT CONDITIONS AND REQUIREMENTS.
E. VERIFY THAT WOOD NAILERS HAVE BEEN PROPERLY INSTALLED.

3.3 PREPARATION

A. TAKE APPROPRIATE MEASURES TO ENSURE THAT FUMES FROM ADHESIVE SOLVENTS ARE NOT DRAWN INTO THE BUILDING THROUGH AIR INTAKES.
B. PRIOR TO PROCEEDING, PREPARE ROOF SURFACE SO THAT IT IS CLEAN, DRY, AND SMOOTH, AND FREE OF SHARP EDGES, FINS, ROUGHENED SURFACES, LOOSE OR FOREIGN MATERIALS, OIL, GREASE AND OTHER MATERIALS THAT MAY DAMAGE THE MEMBRANE.
C. FILL ALL SURFACE VOIDS IN THE IMMEDIATE SUBSTRATE THAT ARE GREATER THAN 1/4 INCH (6 MM) WIDE WITH FILL MATERIAL ACCEPTABLE INSULATION TO MEMBRANE MANUFACTURER.
D. SEAL, GROUT, OR TAPE DECK JOINTS, WHERE NEEDED, TO PREVENT BITUMEN SEEPAGE INTO BUILDING.
E. WOOD NAILERS: PROVIDE WOOD NAILERS AT ALL PERIMETERS AND OTHER LOCATIONS WHERE INDICATED ON THE DRAWINGS, OF TOTAL HEIGHT MATCHING THE TOTAL THICKNESS OF INSULATION BEING USED.

3.4 INSULATION AND COVER BOARD INSTALLATION

A. INSTALL INSULATION IN CONFIGURATION AND WITH ATTACHMENT METHOD(S) SPECIFIED IN PART 2, UNDER ROOFING SYSTEM.
B. INSTALL ONLY AS MUCH INSULATION AS CAN BE COVERED WITH THE COMPLETED ROOFING SYSTEM BEFORE THE END OF THE DAY'S WORK OR BEFORE THE ONSET OF INCLEMENT WEATHER.
C. LAY ROOF INSULATION IN COURSES PARALLEL TO ROOF EDGES.
D. NEATLY AND TIGHTLY FIT INSULATION TO ALL PENETRATIONS, PROJECTIONS, AND NAILERS, WITH GAPS NOT GREATER THAN 1/4 INCH (6 MM). FILL GAPS GREATER THAN 1/4 INCH (6 MM) WITH ACCEPTABLE INSULATION. DO NOT LEAVE THE ROOFING MEMBRANE UNSUPPORTED OVER A SPACE GREATER THAN 1/4 INCH (6 MM).
E. MECHANICAL FASTENING: USING SPECIFIED FASTENERS AND INSULATION PLATES ENGAGE FASTENERS THROUGH INSULATION INTO DECK TO DEPTH AND IN PATTERN REQUIRED BY FACTORY MUTUAL FOR FM CLASS SPECIFIED IN PART 2 AND MEMBRANE MANUFACTURER, WHICHEVER IS MORE STRINGENT.

3.5 SINGLE-PLY MEMBRANE INSTALLATION

A. BEGINNING AT LOW POINT OF ROOF, PLACE MEMBRANE WITHOUT STRETCHING OVER SUBSTRATE AND ALLOW TO RELAX AT LEAST 30 MINUTES BEFORE ATTACHMENT OR SPLICING; IN COLDER WEATHER ALLOW FOR LONGER RELAX TIME.
B. LAY OUT THE MEMBRANE PIECES SO THAT FIELD AND FLASHING SPLICES ARE INSTALLED TO SHED WATER.
C. INSTALL MEMBRANE WITHOUT WRINKLES AND WITHOUT GAPS OR FISHMOUTHS IN SEAMS; BOND AND TEST SEAMS AND LAPS IN ACCORDANCE WITH MEMBRANE MANUFACTURER'S INSTRUCTIONS AND DETAILS.
D. INSTALL MEMBRANE MECHANICALLY ATTACHED TO THE SUBSTRATE USING SEAM BATTENS, FASTENERS, AND EDGE SECUREMENT AS SPECIFIED AND AS REQUIRED BY MEMBRANE MANUFACTURERS.
E. MECHANICAL ATTACHMENT: INSTALL FASTENERS IN THE SEAMS, COVERED BY MEMBRANE.
1. LAY OUT FASTENERS IN COMPLIANCE WITH FM CLASS SPECIFIED IN PART 2, AS RECOMMENDED BY MEMBRANE MANUFACTURER, AND AS INDICATED, WHICHEVER IS MOST STRINGENT.
2. PROPERLY ENGAGE FASTENERS IN THE DECK WITH HEAD FLUSH WITH THE COUNTERSUNK PORTION OF SEAM PLATE.
F. EDGE SECUREMENT: SECURE MEMBRANE AT ALL LOCATIONS WHERE MEMBRANE TERMINATES OR GOES THROUGH AN ANGLE CHANGE GREATER THAN 2 IN 12 INCHES (1:6) USING MECHANICALLY FASTENED REINFORCED PERIMETER FASTENING STRIPS, PLATES, OR METAL EDGING AS INDICATED OR AS RECOMMENDED BY ROOFING MANUFACTURER.
1. EXCEPTIONS: ROUND PIPE PENETRATIONS LESS THAN 18 INCHES (460 MM) IN DIAMETER AND SQUARE PENETRATIONS LESS THAN 4 INCHES (200 MM) SQUARE.
2. METAL EDGING IS NOT MERELY DECORATIVE; ENSURE ANCHORAGE OF MEMBRANE AS INTENDED BY ROOFING MANUFACTURER.

3.6 FLASHING AND ACCESSORIES INSTALLATION

A. INSTALL FLASHINGS, INCLUDING LAPS, SPLICES, JOINTS, BONDING, ADHESION, AND ATTACHMENT, AS REQUIRED BY MEMBRANE MANUFACTURER'S RECOMMENDATIONS AND DETAILS.
B. METAL ACCESSORIES: INSTALL METAL EDGINGS, GRAVEL STOPS, AND COPINGS IN LOCATIONS INDICATED ON THE DRAWINGS, WITH HORIZONTAL LEG OF EDGE MEMBER OVER MEMBRANE AND FLASHING OVER METAL ONTO MEMBRANE.
1. FOLLOW ROOFING MANUFACTURER'S INSTRUCTIONS.
2. REMOVE PROTECTIVE PLASTIC SURFACE FILM IMMEDIATELY BEFORE INSTALLATION.
3. INSTALL WATER BLOCK SEALANT UNDER THE MEMBRANE ANCHORAGE LEG.
4. FLASH WITH MANUFACTURER'S RECOMMENDED FLASHING SHEET UNLESS OTHERWISE INDICATED.
5. WHERE SINGLE APPLICATION OF FLASHING WILL NOT COMPLETELY COVER THE METAL FLANGE, INSTALL ADDITIONAL PIECE OF FLASHING TO COVER THE METAL EDGE.
6. IF THE ROOF EDGE INCLUDES A GRAVEL STOP AND SEALANT IS NOT APPLIED BETWEEN THE LAPS IN THE METAL EDGING, INSTALL AN ADDITIONAL PIECE OF SELF-ADHESIVE FLASHING MEMBRANE OVER THE METAL LAP TO THE TOP OF THE GRAVEL STOP; APPLY SEAM EDGE TREATMENT AT THE INTERSECTIONS OF THE TWO FLASHING SECTIONS.
7. WHEN THE ROOF SLOPE IS GREATER THAN 1:12, APPLY SEAM EDGE TREATMENT ALONG THE BACK EDGE OF THE FLASHING.
C. SCUPPERS: SET IN SEALANT AND SECURE TO STRUCTURE; FLASH AS RECOMMENDED BY MANUFACTURER.
D. ROOFING EXPANSION JOINTS: INSTALL AS SHOWN ON DRAWINGS AND AS RECOMMENDED BY ROOFING MANUFACTURER.
E. FLASHING AT WALLS, CURBS, AND OTHER VERTICAL AND SLOPED SURFACES: INSTALL WEATHERTIGHT FLASHING AT ALL WALLS, CURBS, PARAPETS, CURBS, SKYLIGHTS, AND OTHER VERTICAL AND SLOPED SURFACES THAT THE ROOFING MEMBRANE ABUTS TO; EXTEND FLASHING AT LEAST 8 INCHES (200 MM) HIGH ABOVE MEMBRANE SURFACE.
1. USE THE LONGEST PRACTICAL FLASHING PIECES.
2. EVALUATE THE SUBSTRATE AND OVERLAY AND ADJUST INSTALLATION PROCEDURE IN ACCORDANCE WITH MEMBRANE MANUFACTURER'S RECOMMENDATIONS.
3. COMPLETE THE SPLICE BETWEEN FLASHING AND THE MAIN ROOF SHEET WITH SPECIFIED SPLICE ADHESIVE BEFORE ADHERING FLASHING TO THE VERTICAL SURFACE.
4. PROVIDE TERMINATION DIRECTLY TO THE VERTICAL SUBSTRATE AS SHOWN ON ROOF DRAWINGS.
F. ROOF DRAINS:
1. TAPER INSULATION AROUND DRAIN TO PROVIDE SMOOTH TRANSITION FROM ROOF SURFACE TO DRAIN. USE SPECIFIED PRE-MANUFACTURED TAPERED INSULATION WITH FACER OR SUITABLE BONDING SURFACE TO ACHIEVE SLOPE; SLOPE NOT TO EXCEED MANUFACTURER'S RECOMMENDATIONS.
2. POSITION MEMBRANE, THEN CUT A HOLE FOR ROOF DRAIN TO ALLOW 1/2 TO 3/4 INCH (12 TO 19 MM) OF MEMBRANE TO EXTEND INSIDE CLAMPING RING PAST DRAIN BOLTS.
3. MAKE ROUND HOLES IN MEMBRANE TO ALIGN WITH CLAMPING BOLTS; DO NOT CUT MEMBRANE BACK TO BOLT HOLES.
4. APPLY SEALANT ON TOP OF DRAIN BOWL WHERE CLAMPING RING SEATS BELOW THE MEMBRANE
5. INSTALL ROOF DRAIN CLAMPING RING AND CLAMPING BOLTS; TIGHTEN CLAMPING BOLTS TO ACHIEVE CONSTANT COMPRESSION.
G. FLASHING AT PENETRATIONS: FLASH ALL PENETRATIONS PASSING THROUGH THE MEMBRANE; MAKE FLASHING SEALS DIRECTLY TO THE PENETRATION.
1. PIPES, ROUND SUPPORTS, AND SIMILAR ITEMS: FLASH WITH SPECIFIED PRE-MOLDED PIPE FLASHINGS WHEREVER PRACTICAL; OTHERWISE USE SPECIFIED SELF-CURING ELASTOMERIC FLASHING.
2. PIPE CLUSTERS AND UNUSUAL SHAPED PENETRATIONS: PROVIDE PENETRATION POCKET AT LEAST 2 INCHES (50 MM) DEEP, WITH AT LEAST 1 INCH (25 MM) CLEARANCE FROM PENETRATION, SLOPED TO SHED WATER.
3. STRUCTURAL STEEL TUBING: IF CORNER RADII ARE GREATER THAN 1/4 INCH (6 MM) AND LONGEST SIDE OF TUBE DOES NOT EXCEED 12 INCHES (305 MM), FLASH AS FOR PIPES; OTHERWISE, PROVIDE A STANDARD CURB WITH FLASHING.
4. FLEXIBLE AND MOVING PENETRATIONS: PROVIDE WEATHERTIGHT GOOSENECK SET IN SEALANT AND SECURED TO DECK, FLASHED AS RECOMMENDED BY MANUFACTURER.
5. HIGH TEMPERATURE SURFACES: WHERE THE IN-SERVICE TEMPERATURE IS, OR IS EXPECTED TO BE, IN EXCESS OF 180 DEGREES F (82 DEGREES C), PROTECT THE ELASTOMERIC COMPONENTS FROM DIRECT CONTACT WITH THE HOT SURFACES USING AN INTERMEDIATE INSULATED SLEEVE AS FLASHING SUBSTRATE AS RECOMMENDED BY MEMBRANE MANUFACTURER.

3.7 FINISHING AND WALKWAY INSTALLATION

A. INSTALL WALKWAYS AT ACCESS POINTS TO THE ROOF, AROUND ROOFTOP EQUIPMENT THAT MAY REQUIRE MAINTENANCE, AND WHERE INDICATED ON THE DRAWINGS.
1. USE SPECIFIED WALKWAY PADS UNLESS OTHERWISE INDICATED.
B. WALKWAY PADS: ADHERE TO THE ROOFING MEMBRANE, SPACING EACH PAD AT MINIMUM OF 1.0 INCH (25 MM) AND MAXIMUM OF 3.0 INCHES (75 MM) FROM EACH OTHER TO ALLOW FOR DRAINAGE.
1. IF INSTALLATION OF WALKWAY PADS OVER FIELD FABRICATED SPLICES OR WITHIN 6 INCHES (150 MM) OF A SPLICE EDGE CANNOT BE AVOIDED, ADHERE ANOTHER LAYER OF FLASHING OVER THE SPLICE AND EXTENDING BEYOND THE WALKWAY PAD A MINIMUM OF 6 INCHES (150 MM) ON EITHER SIDE.
2. PRIME THE MEMBRANE, REMOVE THE RELEASE PAPER ON THE PAD, PRESS IN PLACE, AND WALK ON PAD TO ENSURE PROPER ADHESION.

3.8 FIELD QUALITY CONTROL

A. INSPECTION BY MANUFACTURER: PROVIDE FINAL INSPECTION OF THE ROOFING SYSTEM BY A TECHNICAL REPRESENTATIVE EMPLOYED BY ROOFING SYSTEM MANUFACTURER SPECIFICALLY TO INSPECT INSTALLATION FOR WARRANTY PURPOSES (I.E. NOT A SALES PERSON).
B. PERFORM ALL CORRECTIONS NECESSARY FOR ISSUANCE OF WARRANTY.

3.9 CLEANING

A. CLEAN ALL CONTAMINANTS GENERATED BY ROOFING WORK FROM BUILDING AND SURROUNDING AREAS, INCLUDING BITUMEN, ADHESIVES, SEALANTS, AND COATINGS.
B. REPAIR OR REPLACE BUILDING COMPONENTS AND FINISHED SURFACES DAMAGED OR DEFACED DUE TO THE WORK OF THIS SECTION; COMPLY WITH RECOMMENDATIONS OF MANUFACTURERS OF COMPONENTS AND SURFACES.
C. REMOVE LEFTOVER MATERIALS, TRASH, DEBRIS, EQUIPMENT FROM PROJECT SITE AND SURROUNDING AREAS.

3.10 PROTECTION

A. WHERE CONSTRUCTION TRAFFIC MUST CONTINUE OVER FINISHED ROOF MEMBRANE, PROVIDE DURABLE PROTECTION AND REPLACE OR REPAIR DAMAGED ROOFING TO ORIGINAL CONDITION.

END OF SECTION 07500

FWH Architects
3336 Grand Blvd. Suite 201
Holiday, Florida 34690
Ph. 727. 815. 3336
Fax 727. 815. 3337

TO THE BEST OF THE KNOWLEDGE OF THE ARCHITECTS AND ENGINEERS, PLANS AND SPECIFICATIONS COMPLY WITH THE APPLICABLE MINIMUM BUILDING CODES AND THE APPLICABLE MINIMUM FIRE SAFETY STANDARDS

GUY F. FABER
FL License No. AR0015323

revision descriptions
date
no.

STARBUCKS
SHELL CONSTRUCTION
1990 STATE ROAD 19
TAVARES, FL

03.25.2024
date

24007
comm. no.

SPECIFICATIONS

A0.1A

SECTION 07710 - MANUFACTURED ROOF SPECIALTIES

PART 1 - GENERAL

1.1 SECTION REQUIREMENTS

A. SUBMITTALS: PRODUCT DATA, SHOP DRAWINGS, AND COLOR SAMPLES.

B. PROVIDE PRODUCTS THAT COMPLY WITH APPLICABLE REQUIREMENTS OF SMACNA'S "ARCHITECTURAL SHEET METAL MANUAL," UNLESS OTHERWISE INDICATED.

PART 2 - PRODUCTS

2.1 ROOF SPECIALTIES

A. ALUMINUM COPINGS: SEE DRAWINGS AND PROPOSE MANUF. FOR OWNERS REP. APPROVAL.
B. ALUMINUM FASCIA: SEE DRAWINGS AND PROPOSE MANUF. FOR OWNERS REP. APPROVAL.
C. ALUMINUM GRAVEL STOPS: SEE DRAWINGS AND PROPOSE MANUF. FOR OWNERS REP. APPROVAL.
D. ALUMINUM GUTTERS AND DOWNSPOUTS: SEE DRAWINGS AND PROPOSE MANUF. FOR OWNERS REP. APPROVAL.
E. ALUMINUM METAL SHEET: PRE FINISHED

PART 3 - EXECUTION

3.1 INSTALLATION

A. COORDINATE WITH INSTALLATION OF ROOF DECKS AND OTHER SUBSTRATES TO PRODUCE A WATERTIGHT ASSEMBLY CAPABLE OF WITHSTANDING INWARD AND OUTWARD LOADING PRESSURES, AND THERMAL AND LATERAL LOADS.

B. COAT BACK SIDE OF ALL ROOF SPECIALTIES WITH BITUMINOUS COATING WHERE THEY WILL CONTACT WOOD, FERROUS METAL, OR CEMENTITIOUS CONSTRUCTION.

C. EXPANSION PROVISIONS: INSTALL RUNNING LENGTHS TO ALLOW CONTROLLED EXPANSION FOR MOVEMENT OF METAL COMPONENTS, TO PREVENT WATER LEAKAGE, DEFORMATION, OR DAMAGE.

END OF SECTION 07710

SECTION 07720 - ROOF ACCESSORIES

PART 1 - GENERAL

1.1 SECTION REQUIREMENTS

A. SUBMITTALS: PRODUCT DATA, SHOP DRAWINGS, AND COLOR SAMPLES.

PART 2 - PRODUCTS

2.1 MATERIALS

A. ALUMINUM SHEET: ASTM B 209 (ASTM B 209M), ALCLAD ALLOY 3005H25, OR ALLOY AND TEMPER REQUIRED TO SUIT FORMING OPERATIONS, WITH MILL FINISH, UNLESS OTHERWISE INDICATED.

B. EXTRUDED ALUMINUM: ASTM B 221 (ASTM B 221M), ALLOY 6063-T52, OR ALLOY AND TEMPER REQUIRED TO SUIT STRUCTURAL AND FINISH REQUIREMENTS, WITH MILL FINISH, UNLESS OTHERWISE INDICATED.

C. GALVANIZED STEEL SHEET: ASTM A 653/A 653M, G90 (Z275).

2.2 ROOF ACCESSORIES

A. ROOF CURBS AND EQUIPMENT SUPPORTS: FABRICATE FROM .0747-INCH- (1.9-MM-) THICK, GALVANIZED STRUCTURAL STEEL; FACTORY PRIMED AND PREPARED FOR PAINTING WITH WELDED OR SEALED MECHANICAL CORNER JOINTS.

1. PROVIDE UNITS WITH CANT STRIPS AND BASE PROFILE COORDINATED WITH ROOF INSULATION THICKNESS AND ROOF DECK SLOPE.
2. PROVIDE PRESERVATIVE-TREATED WOOD NAILERS AT TOPS OF CURBS.
3. PROVIDE MANUFACTURER'S STANDARD RIGID OR SEMIRIGID INSULATION.
4. SEE DRAWINGS AND PROPOSE FOR OWNERS REP. APPROVAL.

B. LOW-PROFILE GRAVITY VENTILATORS: FABRICATE FROM GALVANIZED STEEL SHEET WITH HIGH-PERFORMANCE ORGANIC FINISH.

1. PROVIDE UNITS WITH INTEGRAL DOUBLE-WALL CURB, WITH MINIMUM 1-INCH- (25-MM-) THICK, GLASS-FIBER BOARD INSULATION, AND WITH MINIMUM 3-INCH (75-MM) ROOF FLANGES.
2. PROVIDE BIRD SCREENS FABRICATED FROM 1/2-INCH- (13-MM-) SQUARE MESH, 0.062-INCH- (1.6-MM-) DIAMETER, STAINLESS-STEEL WIRE.
3. SEE DRAWINGS, PROPOSE FOR OWNERS REP. APPROVAL.

D. RIDGE VENT: HIGH-DENSITY POLYPROPYLENE, NONWOVEN MODIFIED POLYESTER, OR OTHER UV-STABILIZED PLASTIC DESIGNED TO BE INSTALLED UNDER ASPHALT SHINGLES AT RIDGE.

PART 3 - EXECUTION

3.1 INSTALLATION

A. INSTALLATION: UNLESS OTHERWISE INDICATED, INSTALL ROOF ACCESSORY ITEMS ACCORDING TO CONSTRUCTION DETAILS OF NRCA'S "ROOFING AND WATERPROOFING MANUAL." COORDINATE WITH INSTALLATION OF ROOF DECK, VAPOR BARRIERS, ROOF INSULATION, ROOFING, AND FLASHING TO ENSURE COMBINED ELEMENTS ARE SECURE, WATERPROOF, AND WEATHERTIGHT.

END OF SECTION 07720

SECTION 07920 - JOINT SEALANTS

PART 1 - GENERAL

1.1 SUMMARY

A. SECTION INCLUDES:
1. SILICONE JOINT SEALANTS.
2. URETHANE JOINT SEALANTS.
3. LATEX JOINT SEALANTS.

1.2 SUBMITTALS

A. PRODUCT DATA: FOR EACH JOINT-SEALANT PRODUCT INDICATED.
1. FOR SEALANTS AND SEALANT PRIMERS USED INSIDE THE WEATHERPROOFING SYSTEM, PROVIDE PRINTED STATEMENT OF VOC CONTENT.

B. SAMPLES: FOR EACH KIND AND COLOR OF JOINT SEALANT REQUIRED.

C. JOINT-SEALANT SCHEDULE: INCLUDE THE FOLLOWING INFORMATION:
1. JOINT-SEALANT APPLICATION, JOINT LOCATION, AND DESIGNATION.
2. JOINT-SEALANT MANUFACTURER AND PRODUCT NAME.
3. JOINT-SEALANT FORMULATION.
4. JOINT-SEALANT COLOR.

D. PRODUCT TEST REPORTS.

E. FIELD-ADHESION TEST REPORTS.

F. WARRANTIES.

1.3 WARRANTY

A. SPECIAL INSTALLER'S WARRANTY: ORIGINAL STATEMENT ON INSTALLER'S LETTERHEAD IN WHICH INSTALLER AGREES TO REPAIR OR REPLACE JOINT SEALANTS THAT DEMONSTRATE DETERIORATION OR FAILURE WITHIN WARRANTY PERIOD SPECIFIED. OF PROJECTS OF SIMILAR SCOPE.
1. WARRANTY PERIOD: TWO YEARS FROM DATE OF SUBSTANTIAL COMPLETION.

B. SPECIAL MANUFACTURER'S WARRANTY: MANUFACTURER'S STANDARD FORM IN WHICH JOINT SEALANT MANUFACTURER AGREES TO FURNISH JOINT SEALANTS TO REPAIR OR REPLACE THOSE THAT DEMONSTRATE DETERIORATION OR FAILURE UNDER NORMAL USE WITHIN WARRANTY PERIOD SPECIFIED.
1. WARRANTY PERIOD FOR SILICONE SEALANTS: 20 YEARS FOLLOWING DATE OF SUBSTANTIAL COMPLETION.

C. WARRANTY CONDITIONS: SPECIAL WARRANTIES EXCLUDE DETERIORATION OR FAILURE OF JOINT SEALANTS IN NORMAL USE DUE TO STRUCTURAL MOVEMENT RESULTING IN STRESSES ON JOINT SEALANTS EXCEEDING SEALANT MANUFACTURER'S WRITTEN SPECIFICATIONS, JOINT SUBSTRATE DETERIORATION, MECHANICAL DAMAGE, OR NORMAL ACCUMULATION OF DIRT OR OTHER CONTAMINANTS.

PART 2 - PRODUCTS

2.2 MATERIALS, GENERAL

A. VOC CONTENT OF INTERIOR SEALANTS: PROVIDE SEALANTS AND SEALANT PRIMERS FOR USE INSIDE THE WEATHERPROOFING SYSTEM THAT COMPLY WITH THE FOLLOWING LIMITS FOR VOC CONTENT WHEN CALCULATED ACCORDING TO 40 CFR 59, PART 59, SUBPART D (EPA METHOD 24):
1. ARCHITECTURAL SEALANTS: 250 G/L.
2. SEALANT PRIMERS FOR NONPOROUS SUBSTRATES: 250 G/L.
3. SEALANT PRIMERS FOR POROUS SUBSTRATES: 775 G/L.

B. LIQUID-APPLIED JOINT SEALANTS: COMPLY WITH ASTM C 920 AND OTHER REQUIREMENTS INDICATED FOR EACH LIQUID-APPLIED JOINT SEALANT SPECIFIED, INCLUDING THOSE REFERENCING ASTM C 920 CLASSIFICATIONS FOR TYPE, GRADE, CLASS, AND USES RELATED TO EXPOSURE AND JOINT SUBSTRATES.

C. STAIN-TEST-RESPONSE CHARACTERISTICS: WHERE SEALANTS ARE SPECIFIED TO BE NONSTAINING TO POROUS SUBSTRATES, PROVIDE PRODUCTS THAT HAVE UNDERGONE TESTING ACCORDING TO ASTM C 1248 AND HAVE NOT STAINED POROUS JOINT SUBSTRATES INDICATED FOR PROJECT.

D. SUITABILITY FOR CONTACT WITH FOOD: WHERE SEALANTS ARE INDICATED FOR JOINTS THAT WILL COME IN REPEATED CONTACT WITH FOOD, PROVIDE PRODUCTS THAT COMPLY WITH 21 CFR 177.2600.

2.3 SILICONE JOINT SEALANTS

A. MILDEW-RESISTANT SILICONE JOINT SEALANT: ASTM C 920.
1. MANUFACTURERS: SUBJECT TO COMPLIANCE WITH REQUIREMENTS, AVAILABLE MANUFACTURERS OFFERING PRODUCTS THAT MAY BE INCORPORATED INTO THE WORK INCLUDE, BUT ARE NOT LIMITED TO, THE FOLLOWING:
   A. DOW CORNING CORPORATION.
   B. GE ADVANCED MATERIALS - SILICONES.
   C. PECORA CORPORATION.
   D. SIKA CORPORATION; CONSTRUCTION PRODUCTS DIVISION.
   E. TREMCO INCORPORATED.
2. TYPE: SINGLE COMPONENT (S).
3. GRADE: NONSAG (NS).
4. CLASS: 25.
5. USES RELATED TO EXPOSURE: NONTRAFFIC (NT).

2.4 URETHANE JOINT SEALANTS

A. URETHANE JOINT SEALANT - HORIZONTAL TRAFFIC JOINTS : ASTM C 920.
1. MANUFACTURERS: SUBJECT TO COMPLIANCE WITH REQUIREMENTS, AVAILABLE MANUFACTURERS OFFERING PRODUCTS THAT MAY BE INCORPORATED INTO THE WORK INCLUDE, BUT ARE NOT LIMITED TO, THE FOLLOWING:
   A. BOSTIK, INC.
   B. PECORA CORPORATION.
   C. SIKA CORPORATION; CONSTRUCTION PRODUCTS DIVISION.
   D. TREMCO INCORPORATED.
2. TYPE: MULTICOMPONENT (M).
3. GRADE: POURABLE (P).
4. CLASS: 25.
5. USES RELATED TO EXPOSURE: TRAFFIC (T).

B. URETHANE JOINT SEALANT - VERTICAL AND HORIZONTAL NON-TRAFFIC JOINTS : ASTM C 920.
1. MANUFACTURERS: SUBJECT TO COMPLIANCE WITH REQUIREMENTS, AVAILABLE MANUFACTURERS OFFERING PRODUCTS THAT MAY BE INCORPORATED INTO THE WORK INCLUDE, BUT ARE NOT LIMITED TO, THE FOLLOWING:
   A. BOSTIK, INC.
   B. PECORA CORPORATION.
   C. SIKA CORPORATION; CONSTRUCTION PRODUCTS DIVISION.
   D. TREMCO INCORPORATED.
2. TYPE: MULTICOMPONENT (M).
3. GRADE: NONSAG (NS).
4. CLASS: 25.
5. USES RELATED TO EXPOSURE: NONTRAFFIC (NT).

2.5 LATEX JOINT SEALANTS

A. LATEX JOINT SEALANT: ACRYLIC LATEX OR SILICONIZED ACRYLIC LATEX, ASTM C 834, TYPE OP, GRADE NF.
1. MANUFACTURERS: SUBJECT TO COMPLIANCE WITH REQUIREMENTS, AVAILABLE MANUFACTURERS OFFERING PRODUCTS THAT MAY BE INCORPORATED INTO THE WORK INCLUDE, BUT ARE NOT LIMITED TO, THE FOLLOWING:
   A. BOSTIK, INC.
   B. PECORA CORPORATION.
   C. TREMCO INCORPORATED.

2.6 JOINT SEALANT BACKING

A. CYLINDRICAL SEALANT BACKINGS: ASTM C 1330, TYPE C (CLOSED-CELL MATERIAL WITH A SURFACE SKIN), TYPE O (OPEN-CELL MATERIAL), TYPE B (BICELLULAR MATERIAL WITH A SURFACE SKIN) OR ANY OF THE PRECEDING TYPES, AS APPROVED IN WRITING BY JOINT-SEALANT MANUFACTURER FOR JOINT APPLICATION INDICATED, AND OF SIZE AND DENSITY TO CONTROL SEALANT DEPTH AND OTHERWISE CONTRIBUTE TO PRODUCING OPTIMUM SEALANT PERFORMANCE.

B. BOND-BREAKER TAPE: POLYETHYLENE TAPE OR OTHER PLASTIC TAPE RECOMMENDED BY SEALANT MANUFACTURER.

2.7 MISCELLANEOUS MATERIALS

A. PRIMER: MATERIAL RECOMMENDED BY JOINT-SEALANT MANUFACTURER WHERE REQUIRED FOR ADHESION OF SEALANT TO JOINT SUBSTRATES INDICATED, AS DETERMINED FROM PRECONSTRUCTION JOINT-SEALANT-SUBSTRATE TESTS AND FIELD TESTS.

B. CLEANERS FOR NONPOROUS SURFACES: CHEMICAL CLEANERS ACCEPTABLE TO MANUFACTURERS OF SEALANTS AND SEALANT BACKING MATERIALS.

C. MASKING TAPE: NONSTAINING, NONABSORBENT MATERIAL COMPATIBLE WITH JOINT SEALANTS AND SURFACES ADJACENT TO JOINTS.

PART 3 - EXECUTION

3.1 PREPARATION

A. SURFACE CLEANING OF JOINTS: CLEAN OUT JOINTS IMMEDIATELY BEFORE INSTALLING JOINT SEALANTS TO COMPLY WITH JOINT-SEALANT MANUFACTURER'S WRITTEN INSTRUCTIONS.
1. REMOVE LAITANCE AND FORM-RELEASE AGENTS FROM CONCRETE.
2. CLEAN NONPOROUS JOINT SUBSTRATE SURFACES WITH CHEMICAL CLEANERS OR OTHER MEANS THAT DO NOT STAIN, HARM SUBSTRATES, OR LEAVE RESIDUES CAPABLE OF INTERFERING WITH ADHESION OF JOINT SEALANTS.

B. JOINT PRIMING: PRIME JOINT SUBSTRATES WHERE RECOMMENDED BY JOINT-SEALANT MANUFACTURER OR AS INDICATED BY PRECONSTRUCTION JOINT-SEALANT-SUBSTRATE TESTS OR PRIOR EXPERIENCE. APPLY PRIMER TO COMPLY WITH JOINT-SEALANT MANUFACTURER'S WRITTEN INSTRUCTIONS. CONFINE PRIMERS TO AREAS OF JOINT- SEALANT BOND; DO NOT ALLOW SPILLAGE OR MIGRATION ONTO ADJOINING SURFACES.

C. MASKING TAPE: USE MASKING TAPE WHERE REQUIRED TO PREVENT CONTACT OF SEALANT OR PRIMER WITH ADJOINING SURFACES THAT OTHERWISE WOULD BE PERMANENTLY STAINED OR DAMAGED BY SUCH CONTACT OR BY CLEANING METHODS REQUIRED TO REMOVE SEALANT SMEARS. REMOVE TAPE IMMEDIATELY AFTER TOOLING WITHOUT DISTURBING JOINT SEAL.

3.2 INSTALLATION

A. SEALANT INSTALLATION STANDARD: COMPLY WITH RECOMMENDATIONS IN ASTM C 1193 FOR USE OF JOINT SEALANTS AS APPLICABLE TO MATERIALS, APPLICATIONS, AND CONDITIONS INDICATED.

B. INSTALL SEALANT BACKINGS OF KIND INDICATED TO SUPPORT SEALANTS DURING APPLICATION AND AT POSITION REQUIRED TO PRODUCE CROSS-SECTIONAL SHAPES AND DEPTHS OF INSTALLED SEALANTS RELATIVE TO JOINT WIDTHS THAT ALLOW OPTIMUM SEALANT MOVEMENT CAPABILITY.
1. DO NOT LEAVE GAPS BETWEEN ENDS OF SEALANT BACKINGS.
2. DO NOT STRETCH, TWIST, PUNCTURE, OR TEAR SEALANT BACKINGS.
3. REMOVE ABSORBENT SEALANT BACKINGS THAT HAVE BECOME WET BEFORE SEALANT APPLICATION AND REPLACE THEM WITH DRY MATERIALS.

C. INSTALL BOND-BREAKER TAPE BEHIND SEALANTS WHERE SEALANT BACKINGS ARE NOT USED BETWEEN SEALANTS AND BACKS OF JOINTS.

D. INSTALL SEALANTS USING PROVEN TECHNIQUES THAT COMPLY WITH THE FOLLOWING AND AT THE SAME TIME BACKINGS ARE INSTALLED:
1. PLACE SEALANTS SO THEY DIRECTLY CONTACT AND FULLY WET JOINT SUBSTRATES.
2. COMPLETELY FILL RECESSES IN EACH JOINT CONFIGURATION.
3. PRODUCE UNIFORM, CROSS-SECTIONAL SHAPES AND DEPTHS RELATIVE TO JOINT WIDTHS THAT ALLOW OPTIMUM SEALANT MOVEMENT CAPABILITY.

E. TOOLING OF NONSAG SEALANTS: IMMEDIATELY AFTER SEALANT APPLICATION AND BEFORE SKINNING OR CURING BEGINS, TOOL SEALANTS ACCORDING TO REQUIREMENTS SPECIFIED IN SUBPARAGRAPHS BELOW TO FORM SMOOTH, UNIFORM BEADS OF CONFIGURATION INDICATED; TO ELIMINATE AIR POCKETS; AND TO ENSURE CONTACT AND ADHESION OF SEALANT WITH SIDES OF JOINT.
1. REMOVE EXCESS SEALANT FROM SURFACES ADJACENT TO JOINTS.
2. USE TOOLING AGENTS THAT ARE APPROVED IN WRITING BY SEALANT MANUFACTURER AND THAT DO NOT DISCOLOR SEALANTS OR ADJACENT SURFACES.
3. PROVIDE CONCAVE JOINT PROFILE PER FIGURE 8A IN ASTM C 1193, UNLESS OTHERWISE INDICATED.

F. CLEAN OFF EXCESS SEALANT OR SEALANT SMEARS ADJACENT TO JOINTS AS THE WORK PROGRESSES BY METHODS AND WITH CLEANING MATERIALS APPROVED IN WRITING BY MANUFACTURERS OF JOINT SEALANTS AND OF PRODUCTS IN WHICH JOINTS OCCUR.

3.3 JOINT-SEALANT SCHEDULE

A. JOINT-SEALANT APPLICATION: EXTERIOR JOINTS IN HORIZONTAL TRAFFIC SURFACES.
1. JOINT LOCATIONS:
   A. ISOLATION AND CONTRACTION JOINTS IN CAST-IN-PLACE CONCRETE SLABS.
2. JOINT SEALANT: URETHANE.
3. JOINT-SEALANT COLOR: AS SELECTED BY ARCHITECT FROM MANUFACTURER'S FULL RANGE OF COLORS.

B. JOINT-SEALANT APPLICATION: EXTERIOR JOINTS IN VERTICAL SURFACES AND HORIZONTAL NON-TRAFFIC SURFACES.
1. JOINT LOCATIONS:
   A. JOINTS BETWEEN PLANT-PRECAST ARCHITECTURAL CONCRETE UNITS.
   B. CONTROL AND EXPANSION JOINTS IN UNIT MASONRY.
   C. JOINTS IN SIDING, SOFFITS AND EXTERIOR TRIM.
   D. JOINTS BETWEEN DIFFERENT MATERIALS LISTED ABOVE.
   E. PERIMETER JOINTS BETWEEN MATERIALS LISTED ABOVE AND FRAMES OF DOORS, WINDOWS AND LOUVERS.
   F. OTHER JOINTS AS INDICATED.
2. JOINT SEALANT: URETHANE.
3. JOINT-SEALANT COLOR: AS SELECTED BY ARCHITECT FROM MANUFACTURER'S FULL RANGE OF COLORS.

C. JOINT-SEALANT APPLICATION: INTERIOR JOINTS IN HORIZONTAL TRAFFIC SURFACES.
1. JOINT LOCATIONS:
   A. ISOLATION JOINTS IN CAST-IN-PLACE CONCRETE SLABS.
2. JOINT SEALANT: URETHANE.
3. JOINT-SEALANT COLOR: AS SELECTED BY ARCHITECT FROM MANUFACTURER'S FULL RANGE OF COLORS.

D. JOINT-SEALANT APPLICATION: INTERIOR JOINTS IN VERTICAL SURFACES AND HORIZONTAL NONTRAFFIC SURFACES.
1. JOINT LOCATIONS:
   A. CONTROL AND EXPANSION JOINTS ON EXPOSED INTERIOR SURFACES OF EXTERIOR WALLS.
   B. PERIMETER JOINTS OF EXTERIOR OPENINGS WHERE INDICATED.
   C. VERTICAL JOINTS ON EXPOSED SURFACES OF INTERIOR UNIT MASONRY WALLS.
   D. PERIMETER JOINTS BETWEEN INTERIOR WALL SURFACES AND FRAMES OF INTERIOR DOORS AND WINDOWS.
2. JOINT SEALANT: LATEX.
3. JOINT-SEALANT COLOR: AS SELECTED BY ARCHITECT FROM MANUFACTURER'S FULL RANGE OF COLORS.

E. JOINT-SEALANT APPLICATION: MILDEW-RESISTANT INTERIOR JOINTS IN VERTICAL SURFACES AND HORIZONTAL NONTRAFFIC SURFACES.
1. JOINT SEALANT LOCATION:
   A. JOINTS BETWEEN PLUMBING FIXTURES AND ADJOINING WALLS, FLOORS, AND COUNTERS.
   B. TILE CONTROL AND EXPANSION JOINTS WHERE INDICATED.
2. JOINT SEALANT: SILICONE.
3. JOINT-SEALANT COLOR: AS SELECTED BY ARCHITECT FROM MANUFACTURER'S FULL RANGE OF COLORS.

END OF SECTION 079200

SECTION 08110 - STEEL DOORS AND FRAMES

PART 1 - GENERAL

1.1 SECTION REQUIREMENTS

A. SUBMITTALS: PRODUCT DATA AND DOOR SCHEDULE.

B. COMPLY WITH ANSI/SDI 100.

C. FIRE-RATED DOOR ASSEMBLIES: NFPA 80, TESTED PER ASTM E 152, AND LABELED AND LISTED BY UL, ITS, OR ANOTHER TESTING AND INSPECTING AGENCY ACCEPTABLE TO AUTHORITIES HAVING JURISDICTION.

PART 2 - PRODUCTS

2.1 MATERIALS

A. HOT-ROLLED STEEL SHEETS: ASTM A 569/A 569M.
B. COLD-ROLLED STEEL SHEETS: ASTM A 366/A 366M OR ASTM A 620/A 620M.
C. GALVANIZED STEEL SHEETS: ASTM A 653/A 653M, COMMERCIAL STEEL, OR ASTM A 642/A 642M, DRAWING QUALITY, WITH A60 OR G60 (ZF180 OR Z180) COATING DESIGNATION, MILL PHOSPHATIZED.

2.2 STEEL DOORS AND FRAMES

A. PROVIDE STEEL DOORS AND FRAMES MANUFACTURED BY STEELCRAFT, CURRIES, CECO OR ARCHITECT APPROVED EQUIVALENT
B. STEEL DOORS: 1-3/4-INCH- (44-MM-) THICK OF MATERIALS AND ANSI/SDI 100 GRADES AND MODELS INDICATED ON DRAWINGS, SCHEDULES OR IF NOT SHOWN - PROPOSE FOR OWNERS REP. APPROVAL.

1. INTERIOR DOORS: GRADE II, HEAVY-DUTY, MODEL 2, SEAMLESS DESIGN, MINIMUM 0.0478-INCH- (1.2-MM-) THICK, COLD-ROLLED STEEL SHEET FACES.
2. EXTERIOR DOORS: GRADE III, EXTRA HEAVY-DUTY, MODEL 2, SEAMLESS DESIGN, MINIMUM 0.0635-INCH- (1.6-MM-) THICK, GALVANIZED STEEL SHEET FACES.

C. DOOR SILENCERS: THREE ON STRIKE JAMBS OF SINGLE-DOOR FRAMES AND TWO ON HEADS OF DOUBLE-DOOR FRAMES.

D. PLASTER GUARDS: PROVIDE WHERE MORTAR MIGHT OBSTRUCT HARDWARE OPERATION AND TO CLOSE OFF INTERIOR OF OPENINGS.

E. FABRICATE STEEL FRAMES TO BE RIGID, NEAT IN APPEARANCE, AND FREE FROM DEFECTS, WARP, OR BUCKLE.
1. EXTERIOR FRAMES: FABRICATE WITH MITERED OR COPED AND CONTINUOUSLY WELDED CORNERS, FORMED FROM 0.0635-INCH- (1.6-MM-) THICK, GALVANIZED STEEL SHEET.

F. PREPARE DOORS AND FRAMES TO RECEIVE MORTISED AND CONCEALED HARDWARE ACCORDING TO SDI 107.

G. PRIME COAT: GALVANIZED STEEL, FS TT-P-641, TYPE II ZINC-DUST, ZINC-OXIDE PRIMER.

3.1 INSTALLATION

PART 3 - EXECUTION

A. PLACE STEEL FRAMES TO COMPLY WITH SDI 105.
B. INSTALL STEEL DOORS ACCURATELY IN FRAMES, WITHIN CLEARANCES SPECIFIED IN ANSI/SDI 100.
1. FIRE-RATED DOORS: INSTALL WITH CLEARANCES SPECIFIED IN NFPA 80.
2. SMOKE-CONTROL DOORS: COMPLY WITH NFPA 105.

C. PRIME COAT REPAIR: IMMEDIATELY AFTER ERECTION, SAND SMOOTH ANY RUSTED OR DAMAGED AREAS OF PRIME COAT AND REPAIR FINISH WITH COMPATIBLE AIR-DRYING PRIMER.

END OF SECTION 08110

SECTION 08411 - ALUMINUM FRAMED STOREFRONTS

PART 1 - GENERAL

1.1 SECTION REQUIREMENTS

A. STRUCTURAL PERFORMANCE: PROVIDE SYSTEMS, INCLUDING ANCHORAGE, CAPABLE OF WITHSTANDING MIN. CODE COMPLIANT LOADS.
1. MAIN-FRAMING-MEMBER DEFLECTION: LIMITED TO 1/175 OF CLEAR SPAN WITH A SAFETY FACTOR OF 1.65
2. STRUCTURAL-TESTING: SYSTEMS TESTED ACCORDING TO ASTM E 330 AT 150 SAFETY FACTOR> PERCENT OF INWARD AND OUTWARD WIND-LOAD DESIGN PRESSURES DO NOT EVIDENCE MATERIAL FAILURES, STRUCTURAL DISTRESS, DEFLECTION FAILURES, OR PERMANENT DEFORMATION OF MAIN FRAMING MEMBERS EXCEEDING 0.2 PERCENT OF CLEAR SPAN.

B. AIR INFILTRATION: LIMITED TO 0.06 CFM/SQ. FT. (0.3 L/S PER SQ. M) OF SYSTEM SURFACE AREA WHEN TESTED ACCORDING TO ASTM E 283 AT A STATIC-AIR-PRESSURE DIFFERENCE OF THE INDUSTRY STD.

C. WATER PENETRATION: SYSTEMS DO NOT EVIDENCE WATER LEAKAGE WHEN TESTED ACCORDING TO ASTM E 331 AT MINIMUM DIFFERENTIAL PRESSURE OF 20 PERCENT OF INWARD ACTING WIND LOAD DESIGN PRESSURE BUT NOT LESS THAN THE INDUSTRY STANDARD (8 PERCENT).

D. AVERAGE U-VALUE: NOT MORE THAN AS INDICATED ON MECH. PLANS AND PER AAMA 1503.1.

E. SUBMITTALS: PRODUCT DATA, SHOP DRAWINGS, AND COLOR SAMPLES.
1. FOR ENTRANCE SYSTEMS, INCLUDE HARDWARE SCHEDULE AND LOCATIONS.

PART 2 - PRODUCTS

2.1 ALUMINUM-FRAMED STOREFRONTS

A. PROVIDE YKK YES 45 FI SERIES (NON-IMPACT RATED) W/ 2" X 4 1/2"" FRAME COMPONENTS OR ARCHITECT APPROVED EQUAL

B. ALUMINUM: ASTM B 209 (ASTM B 209M) SHEET; ASTM B 221 (ASTM B 221M) EXTRUSIONS.

C. GLAZING: REFER TO NOTES ON DRAWINGS.

D. SEALANTS AND JOINT FILLERS: FOR JOINTS AT PERIMETER OF SYSTEMS AS SPECIFIED IN DIVISION 7 SECTION "JOINT SEALANTS."

E. DOORS: 1 3/4-INCH (54-MM) THICK GLAZED DOORS WITH MINIMUM 0.125-INCH (3.2-MM) THICK, EXTRUDED TUBULAR RAIL AND MEDIUM STILE MEMBERS, MECHANICALLY FASTENED CORNERS WITH REINFORCING BRACKETS THAT ARE DEEP PENETRATION AND FILLET WELDED OR THAT INCORPORATE CONCEALED TIE-RODS, SNAP-ON EXTRUDED-ALUMINUM GLAZING STOPS, AND PREFORMED GASKETS.
1. INTERIOR DOORS: PROVIDE ANSI/BHMA A156.16 SILENCERS, THREE ON STRIKE JAMB OF SINGLE-DOOR FRAMES AND TWO ON HEAD OF DOUBLE-DOOR FRAMES.
2. EXTERIOR DOORS: PROVIDE COMPRESSION WEATHER STRIPPING AT FIXED STOPS. AT OTHER LOCATIONS, PROVIDE SLIDING WEATHER STRIPPING RETAINED IN ADJUSTABLE STRIP MORTISED INTO DOOR EDGE.
3. HARDWARE: SEE HARDWARE SCHEDULE ON DRAWINGS.

F. FASTENERS AND ACCESSORIES: COMPATIBLE WITH ADJACENT MATERIALS, CORROSION-RESISTANT, NONSTAINING, AND NONBLEEDING. USE CONCEALED FASTENERS EXCEPT FOR APPLICATION OF DOOR HARDWARE.

G. FABRICATION: FABRICATE FRAMING IN PROFILES INDICATED FOR FLUSH GLAZING (WITHOUT PROJECTING STOPS). PROVIDE SUBFRAMES AND REINFORCING OF TYPES INDICATED OR, IF NOT INDICATED, AS REQUIRED FOR A COMPLETE SYSTEM. FACTORY ASSEMBLE COMPONENTS TO GREATEST EXTENT POSSIBLE. DISASSEMBLE COMPONENTS ONLY AS NECESSARY FOR SHIPMENT AND INSTALLATION.
1. DOOR FRAMING: REINFORCE TO SUPPORT IMPOSED LOADS. FACTORY ASSEMBLE DOOR AND FRAME UNITS AND FACTORY INSTALL HARDWARE TO GREATEST EXTENT POSSIBLE. REINFORCE DOOR AND FRAME UNITS FOR HARDWARE INDICATED. CUT, DRILL, AND TAP FOR FACTORY-INSTALLED HARDWARE BEFORE FINISHING COMPONENTS. CLASS I ANODIC FINISHES BELOW ARE HEAVIER THAN CLASS II FINISHES AND ARE RECOMMEND FOR EXTERIOR APPLICATIONS.

H. ALUMINUM FINISH: COMPLY WITH NAAMMS "METAL FINISHES MANUAL FOR ARCHITECTURAL AND METAL PRODUCTS." AS PER DRAWINGS AND AS PER OWNERS REP. REQUIREMENTS.
1. COLOR: SEE DRAWINGS.

PART 3 - EXECUTION

3.1 INSTALLATION

A. ISOLATE METAL SURFACES IN CONTACT WITH INCOMPATIBLE METAL OR CORROSIVE SUBSTRATES, INCLUDING WOOD, BY PAINTING CONTACT SURFACES WITH BITUMINOUS COATING OR PRIMER, OR BY APPLYING SEALANT OR TAPE RECOMMENDED BY MANUFACTURER.

B. INSTALL COMPONENTS TO PROVIDE A WEATHERPROOF SYSTEM.

C. INSTALL FRAMING COMPONENTS TRUE IN ALIGNMENT WITH ESTABLISHED LINES AND GRADES TO THE FOLLOWING TOLERANCES:
1. VARIATION FROM PLANE: LIMIT TO 1/8 INCH IN 12 FEET (3 MM IN 3.7 M); 1/4 INCH (6 MM) OVER TOTAL LENGTH.
2. ALIGNMENT: FOR SURFACES ABUTTING IN LINE, LIMIT OFFSET TO 1/16 INCH (1.5 MM). FOR SURFACES MEETING AT CORNERS, LIMIT OFFSET TO 1/32 INCH (0.8 MM).
3. DIAGONAL MEASUREMENTS: LIMIT DIFFERENCE BETWEEN DIAGONAL MEASUREMENTS TO 1/8 INCH (3 MM).

D. INSTALL DOORS WITHOUT WARP OR RACK. ADJUST DOORS AND HARDWARE TO PROVIDE TIGHT FIT AT CONTACT POINTS AND SMOOTH OPERATION.

END OF SECTION 08411

SECTION 08710 - DOOR HARDWARE

PART 1 - GENERAL

1.1 SECTION REQUIREMENTS

A. SUBMITTALS: HARDWARE SCHEDULE.

B. DELIVER KEYS TO OWNER.

C. FOR FIRE-RATED OPENINGS PROVIDE HARDWARE TESTED AND LISTED BY UL OR FM (NFPA 80). ON EXIT DEVICES PROVIDE UL OR FM LABEL INDICATING "FIRE EXIT HARDWARE."

PART 2 - PRODUCTS

2.1 HARDWARE

A. HINGES: PROVIDE THE FOLLOWING:
1. STAINLESS-STEEL OR BRASS/BRONZE HINGES WITH STAINLESS-STEEL PINS FOR EXTERIOR.
2. NONREMOVABLE HINGE PINS FOR EXTERIOR AND PUBLIC INTERIOR EXPOSURE.
3. THREE HINGES FOR 1-3/4-INCH- (45-MM-) THICK DOORS 90 INCHES (2300 MM) OR LESS IN HEIGHT; FOUR HINGES FOR DOORS MORE THAN 90 INCHES (2300 MM) IN HEIGHT.

B. LOCKSETS AND LATCHSETS AS FOLLOWS:
1. BHMA A156.2, SERIES 4000, GRADE (AS PER OWNERS REP.) FOR BORED LOCKS AND LATCHES.
2. BHMA A156.3, GRADE 1 FOR EXIT DEVICES.
3. BHMA A156.5, GRADE (AS PER OWNERS REP.) FOR AUXILLIARY LOCKS.
4. BHMA A156.12, SERIES 5000, GRADE (AS PER OWNERS REP.) FOR INTERCONNECTED LOCKS AND LATCHES.
5. BHMA A156.13, SERIES 1000, GRADE (AS PER OWNERS REP.) FOR MORTISE LOCKS AND LATCHES.
6. LEVER HANDLES ON LOCKSETS AND LATCHSETS, (AS PER OWNERS REP.).
7. PROVIDE TRIM ON EXIT DEVICES MATCHING LOCKSETS.

C. KEY LOCKS TO OWNER'S NEW MASTER-KEY SYSTEM.
1. CYLINDERS WITH SIX-PIN TUMBLERS AND REMOVABLE CORES.
2. PROVIDE CYLINDERS FOR STOREFRONT DOORS, AND OTHER LOCKING DOORS THAT DO NOT REQUIRE OTHER HARDWARE.
3. PROVIDE CONSTRUCTION KEYING.
4. PROVIDE KEY CONTROL SYSTEM, INCLUDING CABINET.

D. CLOSERS: PROVIDE THE FOLLOWING:
1. MOUNT CLOSERS ON INTERIOR SIDE (ROOM SIDE) OF DOOR OPENING. PROVIDE REGULAR-ARM, PARALLEL-ARM, OR TOP-JAMB-MOUNTED CLOSERS AS NECESSARY.
2. ADJUSTABLE DELAYED OPENING (ACCESSIBLE TO THE DISABLED) FEATURE ON CLOSERS.

E. PROVIDE WALL STOPS OR FLOOR STOPS FOR DOORS WITHOUT CLOSERS.

F. PROVIDE HARDWARE FINISHES AS FOLLOWS:
1. HINGES: MATCHING FINISH OF LOCKSET/LATCHSET.
2. LOCKSETS, LATCHSETS, AND EXIT DEVICES: SATIN CHROME PLATED.
3. CLOSERS: MATCHING FINISH OF LOCKSET/LATCHSET.
4. OTHER HARDWARE: MATCHING FINISH OF LOCKSET/LATCHSET.

PART 3 - EXECUTION

3.1 INSTALLATION

3.2 HARDWARE SCHEDULE

A. MOUNT HARDWARE IN LOCATIONS RECOMMENDED BY THE DOOR AND HARDWARE INSTITUTE, UNLESS OTHERWISE INDICATED.
A. HARDWARE - SEE PLANS.

END OF SECTION 08710

SECTION 08800 - GLAZING

PART 1 - GENERAL

1.1 SECTION REQUIREMENTS

A. SUBMITTALS: PRODUCT DATA AND 12-INCH- (300-MM-) SQUARE SAMPLES.

B. COMPLY WITH WRITTEN INSTRUCTIONS OF GLASS PRODUCT MANUFACTURERS; GANA'S "GLAZING MANUAL;" AND PUBLICATIONS OF GANA, AAMA, AND SIGMA AS APPLICABLE TO PRODUCTS INDICATED, UNLESS MORE STRINGENT REQUIREMENTS ARE INDICATED.

C. GLASS AND GLAZING WORK INCLUDES STOREFRONT AND ENTRANCE GLAZING (NOT INDICATED AS PRE-GLAZED, HURRICANE RESISTANT GLASS.

1.2 SYSTEM PERFORMANCE

A. PROVIDE GLASS AND GLAZING THAT WILL WITHSTAND NORMAL TEMPERATURE CHANGES, WIND LOADING, IMPACT LOADING, ETC. WITHOUT BREAKAGE OF GLASS, FAILURE OF SEALS AND LOSS OF AIR-TIGHTNESS AND WATER-TIGHTNESS

1.3 QUALITY ASSURANCE

A. COMPLY WITH RECOMMENDATIONS OF THE FLAT GLASS MARKETING ASSOCIATION "GLAZING MANUAL" AND "SEALANT MANUAL"

B. COMPLY WITH INSULATED GLASS MANUFACTURER'S ASSOCIATION (SIGMA) #65-7-2

C. HURRICANE / IMPACT RESISTANT GLAZING SYSTEM: MUST PASS DADE AND BROWARD COUNTY HURRICANE CYCLING AND IMPACT TESTS AND COMPLY WITH ANSI Z97.1 AND CPSC CATEGORY II

D. WARRANTY: PROVIDE WRITTEN WARRANTY COVERING MANUFACTURER DEFECTS, SIGNED BY THE MANUFACTURER, FOR THE PERIODS STATED BELOW AFTER SUBSTANTIAL COMPLETION
1. INSULATED GLASS: MANUFACTURER'S STANDARD TEN-YEAR MINIMUM PERIOD
2. FLOAT GLASS: MANUFACTURER'S STANDARD FIVE-YEAR MINIMUM PERIOD
3. LAMINATED GLASS: MANUFACTURER'S STANDARD FOUR-YEAR MINIMUM PERIOD

PART 2 - PRODUCTS

2.0 MANUFACTURERS

A. SUBJECT TO COMPLIANCE WITH REQUIREMENTS, PROVIDE PRODUCTS BY ZELEDYNE GLASS PRODUCTS, PPG INDUSTRIES (GLASS GROUP), GUARDIAN INDUSTRIES CORP., VIRACON INC.

B. HURRICANE / IMPACT RESISTANT GLASS: SUBJECT TO COMPLIANCE WITH REQUIREMENTS, PROVIDE PRODUCTS BY ARCH ALUMINUM AND GLASS CO., INC, GLASSLAM, N.G.I., INSULGARD CORP., INTERPANE, SAFLEX, VIRACON, INC.

2.1 GLASS PRODUCTS

A. CLEAR TEMPERED FLOAT GLASS: GRADE B (FULLY TEMPERED), STYLE I (UNCOATED SURFACES), TYPE I, QUALITY Q3, CLASS I

B. INSULATED IMPACT

1. BASIS OF DESIGN: 1 5/16" NOMINALLY THICK, INSULATING, LAMINATED, LOW E COATED GLASS AS MANUFACTURED BY VIRACON.

A. EXTERIOR GLASS PLY: 1/4" CLEAR HS OR FT AS REQUIRED BY CODE
B. COATING: VIRACON VE-2M NEUTRAL LOW E ON #2 SURFACE
C. AIRSPACE: 1/2" AIR FILLED, BLACK PAINTED
D. SILICONE: BLACK
E. INTERIOR GLASS PLY 1: 1/4" CLEAR HS
F. INTERLAYER: SELECT KIND AND THICKNESS AS TESTED IN THE COMBINED ASSEMBLY FOR HURRICANE RESISTANCE TO MEET THE CURRENT FLORIDA BUILDING CODE EDITION
G. INTERIOR GLASS PLY 2: 1/4" CLEAR HS

2. PERFORMANCE REQUIREMENTS

A. VISIBLE LIGHT TRANSMITTANCE 68%
B. EXTERIOR (VIS-OUT) REFLECTANCE 11%
C. INTERIOR (VIS-IN) REFLECTANCE 11%
D. WINTER U-VALUE 0.29
E. SUMMER U-VALUE 0.26
F. SOLAR HEAT GAIN COEFFICIENT 0.37
G. LIGHT TO SOLAR GAIN RATIO 1.84

C. INSULATED NON-IMPACT

1. BASIS OF DESIGN: 1" NOMINALLY THICK, INSULATING, LOW E COATED GLASS AS MANUFACTURED BY VIRACON.

A. EXTERIOR GLASS PLY: 1/4" CLEAR HS OR FT AS REQUIRED BY CODE
B. COATING: VIRACON VE-2M NEUTRAL LOW E ON #2 SURFACE
C. AIRSPACE: 1/2" AIR FILLED, BLACK PAINTED
D. SILICONE: BLACK
E. INTERIOR GLASS PLY 1: 1/4" CLEAR HS OR FT AS REQUIRED BY CODE

2. PERFORMANCE REQUIREMENTS

A. VISIBLE LIGHT TRANSMITTANCE 70%
B. EXTERIOR (VIS-OUT) REFLECTANCE 11%
C. INTERIOR (VIS-IN) REFLECTANCE 12%
D. WINTER U-VALUE 0.29
E. SUMMER U-VALUE 0.26
F. SOLAR HEAT GAIN COEFFICIENT 0.38
G. LIGHT TO SOLAR GAIN RATIO 1.84

D. SINGLE PANEL, NON-IMPACT, CLEAR

1. BASIS OF DESIGN: 1/4" NOMINALLY THICK, LOW E COATED GLASS AS MANUFACTURED BY VIRACON.

A. EXTERIOR GLASS PLY: 1/4" CLEAR HS OR FT AS REQUIRED BY CODE
B COATING: VIRACON ROOM SIDE NEUTRAL LOW E ON #2 SURFACE

2. PERFORMANCE REQUIREMENTS

A. VISIBLE LIGHT TRANSMITTANCE 88 %
B. EXTERIOR (VIS-OUT) REFLECTANCE 7%
C. INTERIOR (VIS-IN) REFLECTANCE 7%
D. WINTER U-VALUE 0.64
E. SUMMER U-VALUE 0.49
F. SOLAR HEAT GAIN COEFFICIENT 0.74
G. LIGHT TO SOLAR GAIN RATIO 1.19

E. IMPACT RESISTANT LAMINATED COATED GLASS:

1. 9/16" VIRACON VLE1-70 LAMINATED COATED GLASS AS MANUFACTURED BY VIRACON.

A. EXTERIOR GLASS PLY: 1/4" CLEAR HS
B. COATING: VLE-70 LOW E ON #2 SURFACE
C. INTERLAYER: SELECT KIND AND THICKNESS AS TESTED IN THE STOREFRONT ASSEMBLY FLORIDA PRODUCT APPROVAL OR MIAMI DADE NOTICE OF ACCEPTANCE FOR HURRICANE PROTECTION
D. INTERIOR GLASS PLY: 1/4" CLEAR HS

2. PERFORMANCE REQUIREMENTS

A. VISIBLE LIGHT TRANSMITTANCE 68%
B. EXTERIOR REFLECTANCE 13%
C. WINTER U-VALUE 0.95
D. SUMMER U-VALUE 0.86
E. SOLAR HEAT GAIN COEFFICIENT 0.43
F. LIGHT TO SOLAR GAIN RATIO 1.58

F. VIRASPAN MONOLITHIC SPANDREL GLASS

1. 1/4" VIRASPAN MONOLITHIC SPANDREL GLASS AS MANUFACTURED BY VIRACON.

A. GLASS PLY: 1/4" CLEAR HEAT TREATED (TEMPER WHERE REQUIRED BY CODE)
B. CERAMIC FRIT: V948 MEDIUM GRAY VIRASPAN CERAMIC PAINT ON #2 SURFACE

2. PERFORMANCE REQUIREMENTS

A. WINTER U-VALUE 1.05
B. SUMMER U-VALUE 1.02

2.2 GLAZING GASKETS / TAPE

A. GLAZING GASKETS: ASTM C864, RESILIENT POLYVINYL CHLORIDE, EXTRUDED SHAPE TO FIT GLAZING CHANNEL RETAINING SLOT; BLACK COLOR.

B. GLAZING TAPE: CLOSED CELL POLYVINYL CHLORIDE FOAM, MAXIMUM WATER ABSORPTION BY VOLUME 2 PERCENT, DESIGNED FOR 25 PERCENT COMPRESSION FOR AIR BARRIER VAPOR RETARDER SEAL, BLACKCOLOR, COILED ON RELEASE PAPER OVER ADHESIVE ON TWO SIDES; WIDTHS REQUIRED FOR SPECIFIC INSTALLATION

C. GLAZING TAPE: BUTYL COMPOUND TAPE WITH INTEGRAL RESILIENT TUBE SPACER, 10 TO 15 SHORE A DUROMETER HARDNESS, BLACK COLOR, COILED ON RELEASE PAPER, WIDTHS REQUIRED FOR SPECIFIC INSTALLATION.

2.3 MISCELLANEOUS GLAZING MATERIALS

A. COMPATIBILITY: ALL MATERIALS SHALL BE COMPATIBLE WITH SURFACES CONTACTED IN INSTALLATION

B. CLEANERS, PRIMERS AND SEALERS: AS RECOMMENDED BY SEALANT/GASKET MANUFACTURER.

C. SETTING BLOCKS: ASTM C 864 NEOPRENE, 80 TO 90 SHORE A DUROMETER HARDNESS; LENGTH 4 INCHES, WIDTH OF GLAZING RABBET SPACE LESS 1/16 INCH, HEIGHT REQUIRED FOR GLAZING METHOD, PANE WEIGHT AND PANE AREA.

D. SPACERS: SHIMS: ASTM C 864: NEOPRENE, 50 TO 60 SHORE A DUROMETER HARDNESS; LENGTH 3 INCHES, ONE HALF HEIGHT OF GLAZING STOP, THICKNESS REQUIRED FOR APPLICATION, ONE FACE SELF-ADHESIVE.

E. GLAZING SPLINES: ASTM C 864, RESILIENT POLYVINYL CHLORIDE, EXTRUDED SHAPE TO FIT GLAZING CHANNEL RETAINING SLOT; BLACK COLOR

PART 3 - EXECUTION

3.1 PREPARATION / INSTALLATION

A. CLEAN GLAZING / FRAMING MEMBERS IMMEDIATELY BEFORE GLAZING TO REMOVE ALL DETRIMENTAL SUBSTANCES

B. ADJUST GLAZING CHANNEL DIMENSIONS AS REQUIRED BY CONDITIONS FOR PROPER BITE, EDGE/FACE CLEARANCES, AND SEAL THICKNESS

C. INSTALL PROPERLY SIZED SETTING BLOCKS IN SILL RABBET AT ONE QUARTER OF GLASS WIDTH FROM EACH CORNER, BUT NOT CLOSER THAN 6 INCHES UNLESS NOTED. SET BLOCKS IN THIN COURSE OF SEALANT SUITABLE FOR HEEL BEAD USE.

D. PROVIDE SPACERS AND EDGE BLOCKS, CORRECTLY SIZED FOR CONDITIONS. PROVIDE 1/8 INCH MINIMUM BITE OF SPACERS ON GLASS.

E. MITER WEDGE-SHAPED GASKETS AT CORNERS, PREVENT PULL AWAY AT CORNERS, SEAL CORNER AND BUTT JOINTS AS RECOMMENDED BY GASKET MANUFACTURER.

F. TRIM SIGHT EXPOSED TAPE FLUSH WITH STOP AND FINISH SEALANT FLUSH WITH SIGHT LINE

3.2 PROTECTION AND CLEANING

A. PROTECT GLASS FROM CONTAMINATING SUBSTANCES
B. REMOVE AND REPLACE BROKEN, CHIPPED, CRACKED, ABRADED OR DAMAGED GLASS
C. REMOVE LABELS AND WASH GLASS ON BOTH FACES PRIOR TO FINAL ACCEPTANCE
D. REMOVE GLAZING MATERIALS FROM FINISHED SURFACES

END OF SECTION 08800

SECTION 09240 - COMMERCIAL CEMENT PLASTER 1

PART I - GENERAL

1.01 SUMMARY:

THIS DOCUMENT IS INTENDED TO BE USED IN PREPARING SPECIFICATIONS FOR PROJECTS UTILIZING COMMERCIAL CEMENT PLASTER 1 BY DRYVIT APPLIED TO CONCRETE OR CMU SUBSTRATES.

1.02 REFERENCES

A. INTERNATIONAL BUILDING CODES (IBC AND IRC)
B. AMERICAN CONCRETE INSTITUTE ACI 524R: GUIDE TO PORTLAND CEMENT PLASTERING
C. PORTLAND CEMENT ASSOCIATION: PORTLAND CEMENT PLASTER (STUCCO) MANUAL
D. ASTM A 526: STEEL SHEET, HOT-DIP GALVANIZED, COMMERCIAL QUALITY
E. ASTM C 150: STANDARD SPECIFICATION FOR PORTLAND CEMENT
F. ASTM C 754: STANDARD SPECIFICATION FOR INSTALLATION OF STEEL FRAMING MEMBERS TO RECEIVE SCREW-ATTACHED GYPSUM PANEL PRODUCTS
G. ASTM C 847: STANDARD SPECIFICATION FOR METAL LATH
H. ASTM C 897: STANDARD SPECIFICATION FOR AGGREGATE FOR JOB MIXED PORTLAND CEMENT BASED PLASTERS
I. ASTM C 920: STANDARD SPECIFICATION FOR ELASTOMERIC JOINT SEALANTS
J. ASTM C 926: STANDARD SPECIFICATION FOR APPLICATION OF PORTLAND CEMENT-BASED PLASTER
K. ASTM C 1007: STANDARD SPECIFICATION FOR INSTALLATION OF LOAD BEARING (TRANSVERSE AND AXIAL) STEEL STUDS AND RELATED ACCESSORIES.
L. ASTM C 1063: STANDARD SPECIFICATION FOR INSTALLATION OF LATHING AND FURRING TO RECEIVE INTERIOR AND EXTERIOR PORTLAND CEMENT-BASED PLASTER
M. ASTM C 1328: STANDARD SPECIFICATION FOR PLASTIC (STUCCO) CEMENT
N. ASTM D 226: STANDARD SPECIFICATION FOR ASPHALT SATURATED ORGANIC FELT USED IN ROOFING AND WATERPROOFING
O. ASTM D 1784: STANDARD SPECIFICATION FOR RIGID POLY (VINYL CHLORIDE) (PVC) COMPOUNDS AND CHLORINATED POLY (VINYL CHLORIDE) (CPVC) COMPOUNDS
P. ICC-ES AC11: CEMENTITIOUS EXTERIOR WALL COATINGS

1.03 SUBMITTALS

A. SUBMITTAL REQUIREMENTS BY THE CONTRACTOR ARE TO BE INDICATED IN THE CONSTRUCTION DOCUMENTS AS REQUIRED, INCLUDING:
1. PRODUCT LITERATURE, SAMPLES OR MOCK UP.
2. FINISH SAMPLE INDICATING COLOR AND TEXTURE FOR APPROVAL BY ARCHITECT/OWNER.

1.04 DESCRIPTION

A. COMMERCIAL CEMENT PLASTER 1 CONSISTS OF DRYVIT CCP BASE - SANDED OR CONCENTRATE*, DRYVIT ACRYLIC PRIMER AND DRYVIT ACRYLIC COATING OR FINISH. CCP BASE MAY BE APPLIED DIRECTLY TO THE PROPERLY PREPARED CONCRETE OR CMU SUBSTRATE OR TO METAL LATH AND WATER-RESISTIVE BARRIER (AS SPECIFIED).

1. DESIGN REQUIREMENTS:

A. SUBSTRATES SHALL COMPLY WITH LOCAL CODE REQUIREMENTS AND PRACTICES FOR USE UNDER CEMENT PLASTER AND SHALL BE:
1) POURED IN PLACE OR PRECAST CONCRETE
2) CMU MASONRY

B. THE ROOFING MATERIALS SHALL BE LOADED ONTO THE ROOF AND INTERIOR WALLBOARD STOCKED IN THE BUILDING PRIOR TO THE INSTALLATION OF THE COMMERCIAL CEMENT PLASTER 1.

C. DEFLECTION OF SUBSTRATE SYSTEMS SHALL NOT EXCEED L/360.

D. THE SLOPE OF INCLINED SURFACES SHALL NOT BE LESS THAN 6:12 (27°) AND THE LENGTH SHALL NOT EXCEED 12".

E. SLOPES ON WINDOWSILLS PROJECTING 4 IN (102 MM) OR LESS, SHALL NOT BE LESS THAN 3:12.

F. EXPANSION JOINTS:
1) DESIGN AND LOCATION OF EXPANSION JOINTS SHALL BE DETERMINED BY THE PROJECT DESIGN PROFESSIONAL AND INDICATED ON THE CONTRACT DOCUMENTS. AS A MINIMUM, EXPANSION JOINTS IN THE COMMERCIAL CEMENT PLASTER 1 ARE REQUIRED AT THE FOLLOWING LOCATIONS:
   A) WHERE EXPANSION JOINTS OCCUR IN THE SUBSTRATE SYSTEM.
   B) WHERE BUILDING EXPANSION JOINTS OCCUR.
   C) AT FLOOR LINES IN WOOD FRAME CONSTRUCTION.
   D) WHERE COMMERCIAL CEMENT PLASTER 1 ABUTS DISSIMILAR MATERIALS.
   E) WHERE THE SUBSTRATE CHANGES.
   F) WHERE SIGNIFICANT STRUCTURAL MOVEMENT OCCURS SUCH AS CHANGES IN ROOFLINE, BUILDING SHAPE OR STRUCTURAL SYSTEM.

G. CONTROL JOINTS:
1) DESIGN AND LOCATION OF CONTROL JOINTS SHALL BE DETERMINED BY THE DESIGN PROFESSIONAL IN GENERAL ACCORDANCE WITH ASTM C 1063 AND INDICATED ON THE CONTRACT DRAWINGS. AS A MINIMUM, CONTROL JOINTS SHALL BE LOCATED AT THE FOLLOWING LOCATIONS:
   A) CORNERS OF OPENINGS
   B) SUCH THAT MONOLITHIC WALL AREAS DO NOT EXCEED 144 FT^2 (13.4 M^2)
   C) LENGTH TO WIDTH RATIOS OF WALL AREAS SHALL NOT EXCEED 2.5:1
   D) MAXIMUM SPACING OF CONTROL JOINTS SHALL NOT EXCEED 18 FT (5.5 M)

H. SEALANTS
1) REFER TO DRYVIT PUBLICATION DS153 FOR A LIST OF SEALANTS THAT HAVE BEEN TESTED FOR COMPATIBILITY WITH DRYVIT PRODUCTS.

I. VAPOR RETARDERS
1) USE AND LOCATION OF VAPOR RETARDERS WITHIN A WALL ASSEMBLY IS THE RESPONSIBILITY OF THE PROJECT DESIGNER AND SHALL COMPLY WITH LOCAL BUILDING CODE REQUIREMENTS. TYPE AND LOCATION SHALL BE NOTED ON THE CONTRACT DOCUMENTS. VAPOR RETARDERS MAY BE INAPPROPRIATE IN CERTAIN AREAS AND CAN RESULT IN CONDENSATION WITHIN THE WALL ASSEMBLY WHEN INCORRECTLY USED. REFER TO DRYVIT PUBLICATION DS159 FOR ADDITIONAL INFORMATION.

J. FLASHING SHALL BE PROVIDED AT ALL ROOF-WALL INTERSECTIONS, WINDOWS, DOORS, CHIMNEYS, DECKS, BALCONIES, AND OTHER AREAS AS NECESSARY TO PREVENT WATER PENETRATION BEHIND COMMERCIAL CEMENT PLASTER 1.

K. SITE COATED EPS SHAPES AND STARTER BOARDS: SHALL BE COATED ON SITE UTILIZING THE SAME MATERIALS (EPS, BASE MATERIAL MIXTURE, REINFORCING MESH, AND FINISH) AS SPECIFIED FOR THE PROJECT.

L. PRE BASE COATED EPS SHAPES AND STARTER BOARDS: SHALL BE SUPPLIED BY ACROCORE OR OTHER APPROVED SHAPE MANUFACTURER.

2. PERFORMANCE REQUIREMENTS: AS A MINIMUM, DRYVIT COMMERCIAL CEMENT PLASTER 1 PRODUCTS SHALL MEET:
A. ASTM C 1328: STANDARD SPECIFICATION FOR PLASTIC (STUCCO) CEMENT

1.05 QUALITY ASSURANCE

A. QUALIFICATIONS:
1. MANUFACTURER: SHALL BE DRYVIT SYSTEMS, INC. OR APPROVED SUPPLIERS. ALL MATERIALS SHALL BE OBTAINED FROM DRYVIT SYSTEMS, INC. OR ITS AUTHORIZED DISTRIBUTORS.
2. PLASTERING CONTRACTOR:
   A. SHALL BE KNOWLEDGEABLE IN THE PROPER INSTALLATION OF EXTERIOR LATHING AND CEMENT PLASTER PRODUCTS.
   B. SHALL HAVE QUALIFIED AND PROPERLY TRAINED PEOPLE TO PERFORM WORK.
   C. SHALL BE LICENSED, BONDED AND INSURED.
   D. SHALL HAVE EXPERIENCE IN APPLICATION OF CEMENT PLASTER PRODUCTS ON PROJECTS OF COMPARABLE SCOPE.
3. MACHINE COATED DRYVIT EPS SHAPES AND STARTER BOARDS: SHALL BE SUPPLIED BY ACROCORE OR OTHER MANUFACTURER THAT SUBSCRIBES TO THE DRYVIT THIRD PARTY CERTIFICATION AND QUALITY ASSURANCE PROGRAM.

B. MOCK-UP
1. THE CONTRACTOR SHALL, BEFORE THE PROJECT COMMENCES, PROVIDE THE OWNER/ARCHITECT WITH A MOCK-UP FOR APPROVAL.
2. THE MOCK-UP SHALL BE OF SUITABLE SIZE AS REQUIRED TO ACCURATELY REPRESENT EACH COLOR AND TEXTURE TO BE UTILIZED ON THE PROJECT.
3. THE MOCK-UP SHALL BE PREPARED WITH THE SAME PRODUCTS, TOOLS, EQUIPMENT AND TECHNIQUES REQUIRED FOR THE ACTUAL APPLICATIONS. THE FINISH USED SHALL BE FROM THE SAME BATCH AS THAT BEING USED FOR THE PROJECT.
4. THE APPROVED MOCK-UP SHALL BE AVAILABLE AND MAINTAINED AT THE JOB SITE.

1.06 DELIVERY, STORAGE AND HANDLING

A. ALL COMMERCIAL CEMENT PLASTER 1 MATERIALS SHALL BE DELIVERED TO THE JOB SITE IN THE ORIGINAL, UNOPENED PACKAGES WITH LABELS INTACT. QUESTIONABLE MATERIALS SHALL NOT BE USED.

B. MATERIALS SHALL BE STORED AT THE JOB SITE, AND AT ALL TIMES, IN A COOL, DRY LOCATION, OUT OF DIRECT SUNLIGHT, PROTECTED FROM WEATHER AND OTHER SOURCES OF DAMAGE. MINIMUM STORAGE TEMPERATURE SHALL BE AS FOLLOWS:
1. DPR, PMR®, HDP®, WEATHERLASTIC AND E FINISHES, COLOR PRIME, PRIMUS, GENESIS AND NCB: 40 °F (4 °C).

C. FOR OTHER PRODUCTS, REFER TO SPECIFIC PRODUCT DATA SHEETS.

D. PROTECT ALL PRODUCTS FROM WEATHER AND DIRECT SUNLIGHT.

E. MAXIMUM STORAGE TEMPERATURE SHALL NOT EXCEED 100 °F (38 °C). NOTE: MINIMIZE EXPOSURE OF MATERIALS TO TEMPERATURES OVER 90 °F (32 °C). FINISHES EXPOSED TO TEMPERATURES OVER 110 °F (43 °C) FOR EVEN SHORT PERIODS MAY EXHIBIT SKINNING, INCREASED VISCOSITY AND SHOULD BE INSPECTED PRIOR TO USE.

1.07 PROJECT CONDITIONS

A. APPLICATION OF WET MATERIALS SHALL NOT TAKE PLACE DURING INCLEMENT WEATHER UNLESS APPROPRIATE PROTECTION IS PROVIDED. PROTECT MATERIALS FROM INCLEMENT WEATHER UNTIL THEY ARE DRY.

B. DRYVIT CCP BASE SHALL NOT BE APPLIED WHEN WALL OR AMBIENT TEMPERATURES ARE BELOW 40 °F (4 °C).

C. AT THE TIME OF DRYVIT PRODUCT APPLICATION, THE AIR AND WALL SURFACE TEMPERATURES SHALL BE FROM 40 °F (4 °C) MINIMUM TO 100 °F (38 °C) MAXIMUM FOR THE FOLLOWING PRODUCTS:
1. DPR, PMR, HDP, WEATHERLASTIC AND E FINISHES®, COLOR PRIME, PRIMUS, GENESIS AND NCB.
2. FOR OTHER PRODUCTS, REFER TO SPECIFIC PRODUCT DATA SHEETS.

D. THESE TEMPERATURES SHALL BE MAINTAINED WITH ADEQUATE AIR VENTILATION AND CIRCULATION FOR A MINIMUM OF 24 HOURS (48 HOURS FOR WEATHERLASTIC FINISHES, AMERISTONE, AND TERRANEO) THEREAFTER, OR UNTIL THE PRODUCTS ARE COMPLETELY DRY. REFER TO PUBLISHED PRODUCT DATA SHEETS FOR MORE SPECIFIC INFORMATION.

E. CCP BASE SHALL BE COMPLETELY DRY AND PROPERLY CURED FOR A MINIMUM OF 7 DAYS PRIOR TO PRIMER APPLICATION.

F. IF NECESSARY, TENTING, HEATING AND VENTILATION MAY BE UTILIZED TO MAINTAIN REQUIRED CONDITIONS. HEATERS SHALL BE VENTED TO THE OUTSIDE.

G. PROTECT THE COMMERCIAL CEMENT PLASTER 1 MATERIALS FROM UNEVEN AND EXCESSIVE EVAPORATION IN DRY, WARM, OR WINDY WEATHER. ALWAYS WORK THE SHADY SIDE OF THE WALL. REFER TO SECTION 3.03.B AND 3.03.C FOR CCP BASE CURING REQUIREMENTS.

1.08 SEQUENCING AND SCHEDULING

A. INSTALLATION OF THE COMMERCIAL CEMENT PLASTER 1 SHALL BE COORDINATED WITH OTHER CONSTRUCTION TRADES.

1.09 WARRANTY

A. DRYVIT SYSTEMS, INC. SHALL PROVIDE A LIMITED WARRANTY AGAINST DEFECTIVE MATERIAL UPON WRITTEN REQUEST. DRYVIT SHALL MAKE NO OTHER WARRANTIES, EXPRESSED OR IMPLIED. DRYVIT DOES NOT WARRANT WORKMANSHIP. FULL DETAILS ARE AVAILABLE FROM DRYVIT SYSTEMS, INC.

PART II - PRODUCTS

2.01 MANUFACTURER:

A. ALL COMPONENTS OF COMMERCIAL CEMENT PLASTER 1 SHALL BE OBTAINED FROM DRYVIT OR ITS AUTHORIZED DISTRIBUTORS.

2.02 MATERIALS

A. PAPER BACKED METAL LATH (BY OTHERS): SPECIFIC TYPE TO BE SELECTED BY DESIGNER BASED ON SPECIFIC PROJECT REQUIREMENTS. PAPER BACKING OR OTHER SLIP SHEET IS REQUIRED WHEN INSTALLED OVER BACKSTOP® NT® LIQUID AIR/WATER RESISTIVE BARRIER.
1. SELF-FURRING DIAMOND MESH METAL LATH SHALL BE GALVANIZED, MINIMUM 2.5 LBS/SQ YD (1.4 KG/M^2) OR 3.4 LBS/YD^2 (1.9 KG/M^2) AND COMPLY WITH ASTM C 847.
2. SELF FURRING WELDED WIRE LATH, MINIMUM 16 GAUGE, SHALL BE GALVANIZED WITH OPENINGS NOT EXCEEDING 2 IN X 2 IN (51 MM X 51 MM), AND COMPLY WITH ASTM C 933.
3. 3/8 IN (9.5 MM) GALVANIZED RIB LATH SHALL COMPLY WITH ASTM C 847.
4. SELF FURRING WOVEN WIRE LATH, MINIMUM 17 GAUGE, SHALL BE GALVANIZED WITH OPENINGS NOT EXCEEDING 1 1/2 IN X 1 1/2 IN (38 MM X 38 MM) MEETING ASTM C 1032.

B. ACCESSORIES (BY OTHERS).
1. TYPE, STYLE AND MANUFACTURER SHALL BE INDICATED ON CONSTRUCTION DOCUMENTS.
2. DEPTH OF ACCESSORIES (GROUNDS) SHALL BE SIZED FOR THE PLASTER THICKNESS.
3. IN CORROSIVE ENVIRONMENTS, ACCESSORIES MANUFACTURED OF PVC OR ZINC ARE RECOMMENDED.
4. STEEL ACCESSORIES SHALL MEET ASTM C 841.
5. PVC ACCESSORIES SHALL MEET ASTM D 1784 AND ASTM C 1063.

C. PLASTER BASE COAT:
1. DRYVIT CCP BASE - SANDED: A FIBERGLASS REINFORCED, CEMENT PLASTER MIX UTILIZING ALKALI RESISTANT FIBERS AND PROPRIETARY CEMENTITIOUS ADMIXTURES WHICH IS FIELD MIXED WITH WATER AND DRYVIT AC-100 ACTIVATOR (WHEN SPECIFIED). CCP BASE - SANDED IS PACKAGED IN 80 LB (36.3 KG) BAGS.

D. MACHINE COATED DRYVIT EPS SHAPES AND STARTER BOARDS: SHALL BE SUPPLIED BY ACROCORE OR OTHER MANUFACTURER THAT SUBSCRIBES TO THE DRYVIT THIRD PARTY CERTIFICATION AND QUALITY ASSURANCE PROGRAM.

E. PRIMER:
1. DRYVIT COLOR PRIME®, COLOR PRIME-W OR PRIMER WITH SAND®: A WATER-BASED, PIGMENTED ACRYLIC PRIMER APPLIED OVER THE CURED COMMERCIAL CEMENT PLASTER BASE COAT TO IMPROVE ADHESION AND PROVIDE A MORE UNIFORM APPEARANCE OF THE FINISH.

F. DRYVIT COATING:
1. DEMANDIT SMOOTH - INTEGRALLY COLORED SMOOTH EXTERIOR WALL COATING ENHANCED WITH PROVEN MILDEW RESISTANCE. A MINIMUM OF 2 COATS ARE REQUIRED.

G. DRYVIT FINISH(ES): 100% ACRYLIC FINISHES WITH INTEGRAL COLOR AND TEXTURE. SHALL BE THE TYPE, COLOR AND TEXTURE AS SELECTED BY THE ARCHITECT/OWNER AND SHALL BE OF THE FOLLOWING TYPES:
1. STANDARD DPR (DIRT PICKUP RESISTANCE): WATER-BASED, ACRYLIC COATING WITH INTEGRAL COLOR AND TEXTURE AND FORMULATED WITH DPR CHEMISTRY:
   A. SANDPEBBLE FINE DPR: FINE PEBBLE TEXTURE

PART III - EXECUTION

3.01 EXAMINATION

A. PRIOR TO INSTALLATION OF COMMERCIAL CEMENT PLASTER 1, IT IS THE CONTRACTOR'S RESPONSIBILITY TO ENSURE THAT:
1. THE SURFACES TO RECEIVE PLASTER ARE FREE OF DUST, LOOSE PARTICLES, OIL AND OTHER CONDITIONS THAT WOULD AFFECT THE ADHESION, INSTALLATION OR PERFORMANCE OF COMMERCIAL CEMENT PLASTER 1 MATERIALS.
2. THE LATH IS OF THE PROPER TYPE, INSTALLED TIGHT, PROPERLY FASTENED, AND MEETS THE REQUIREMENTS OF ASTM C 1063, ASTM C 847 (EXPANDED METAL), ASTM C 933 (WELDED WIRE), OR ASTM C 1032 (WOVEN WIRE), AND LOCAL BUILDING CODE REQUIREMENTS.
3. ALL ACCESSORIES INCLUDING CORNER AIDS, CONTROL AND EXPANSION JOINTS, CASING BEADS, ETC. ARE PROPERLY FASTENED AND POSITIONED ACCORDING TO CONTRACT DRAWINGS AND LOCAL BUILDING CODE REQUIREMENTS.
4. THE WATER-RESISTIVE BARRIER (IF SPECIFIED) IS OF A PROPER TYPE AND HAS BEEN INSTALLED IN A WEATHERBOARD FASHION IN ACCORDANCE WITH BUILDING CODE AND MANUFACTURER'S REQUIREMENTS.
5. DOORS, WINDOWS, DECKS, AND OTHER OPENINGS AND PENETRATIONS HAVE BEEN PROPERLY FLASHED IN ACCORDANCE WITH BUILDING CODE AND CONTRACT DOCUMENTS AND COMMERCIAL CEMENT PLASTER 1 INSTALLATION DETAILS DS824.
6. METAL ROOF FLASHING HAS BEEN INSTALLED IN ACCORDANCE WITH THE MANUFACTURER'S REQUIREMENTS, ASPHALT ROOFING MANUFACTURERS ASSOCIATION (ARMA) STANDARDS AND COMMERCIAL CEMENT PLASTER 1 INSTALLATION DETAILS DS824, OR AS OTHERWISE NECESSARY TO MAINTAIN A WATERTIGHT ENVELOPE.
7. THE SUBSTRATE IS FLAT WITHIN 1/4 IN (6.4 MM) IN 10 FT (3.0 M).
8. THE CONTRACTOR SHALL NOTIFY THE GENERAL CONTRACTOR AND/OR OWNER AND/OR ARCHITECT OF ALL DISCREPANCIES. DO NOT PROCEED UNTIL UNSATISFACTORY CONDITIONS ARE RESOLVED.

3.02 PREPARATION

A. PROTECTION
1. THE COMMERCIAL CEMENT PLASTER 1 MATERIALS SHALL BE PROTECTED BY PERMANENT OR TEMPORARY MEANS FROM WEATHER AND OTHER DAMAGE PRIOR TO, DURING, AND FOLLOWING APPLICATION, UNTIL DRY.
2. PROTECT ADJOINING WORK AND PROPERTY.

B. SOLID SURFACES SUCH AS PRECAST OR CAST-IN-PLACE CONCRETE OR MASONRY, SHALL HAVE ADEQUATE SUCTION AND SURFACE ROUGHNESS TO PROVIDE BOND. SMOOTH OR NON-ABSORPTIVE SURFACES SHALL BE PREPARED BY THE FOLLOWING METHODS:
1. SANDBLASTING, WIRE BRUSHING, ACID ETCHING, CHIPPING OR ANY COMBINATION THEREOF. REFER TO ASTM D 4258, ASTM D 4259 ASTM D 4260, OR ASTM D 4261 AS APPLICABLE.
2. APPLICATION OF AN APPROVED BONDING AGENT.
3. WHERE EFFECTIVE BOND CANNOT BE ACHIEVED, THE ENTIRE SURFACE SHALL BE COVERED WITH FURRED METAL LATH IN ACCORDANCE WITH ASTM C 1063 AND BUILDING CODE REQUIREMENTS.

3.03 INSTALLATION

A. MIXING AND APPLICATION INSTRUCTIONS - REFER TO THE PRODUCT LITERATURE FOR SPECIFIC MIXING AND APPLICATION INSTRUCTIONS OF EACH PRODUCT.

B. CCP BASE SHALL BE MOIST CURED FOR A MINIMUM OF 48 HOURS FOLLOWING APPLICATION.

C. CCP BASE SHALL BE COMPLETELY DRY AND CURED FOR A MINIMUM OF 7 DAYS PRIOR TO APPLICATION OF PRIMER AND FINISH.

D. THE INSTALLATION OF MACHINE COATED DRYVIT EPS SHAPES AND STARTER BOARDS SHALL BE IN ACCORDANCE WITH DRYVIT PUBLICATION DS854.

3.04 FIELD QUALITY CONTROL

A. THE LATH AND WATER-RESISTIVE BARRIER INSTALLATION SHALL BE INSPECTED AS REQUIRED BY THE LOCAL BUILDING DEPARTMENT PRIOR TO PLASTER MATERIALS BEING APPLIED.

B. THE CONTRACTOR SHALL BE RESPONSIBLE FOR THE PROPER APPLICATION OF THE COMMERCIAL CEMENT PLASTER 1 MATERIALS.

C. DRYVIT ASSUMES NO RESPONSIBILITY FOR ON-SITE INSPECTIONS OR APPLICATION OF ITS PRODUCTS.

3.05 CLEANING

A. ALL EXCESS COMMERCIAL CEMENT PLASTER 1 MATERIALS SHALL BE REMOVED FROM THE JOB SITE BY THE CONTRACTOR IN ACCORDANCE WITH CONTRACT PROVISIONS.

B. ALL SURROUNDING AREAS, WHERE THE DRYVIT COMMERCIAL CEMENT PLASTER 1 HAS BEEN APPLIED, SHALL BE LEFT FREE OF DEBRIS AND FOREIGN SUBSTANCES RESULTING FROM THE CONTRACTOR'S WORK.

3.06 PROTECTION

A. THE COMMERCIAL CEMENT PLASTER 2 MATERIALS SHALL BE PROTECTED FROM WEATHER AND OTHER DAMAGE UNTIL PERMANENT PROTECTION IN THE FORM OF FLASHINGS, SEALANTS, ETC. ARE INSTALLED.

END OF SECTION 09240

SECTION 09260 - GYPSUM BOARD ASSEMBLIES

PART 1 - GENERAL

1.1 SECTION REQUIREMENTS

A. SUBMITTALS: PRODUCT DATA.

B. STC-RATED ASSEMBLIES: PROVIDE MATERIALS AND CONSTRUCTION IDENTICAL TO ASSEMBLIES WHOSE STC RATINGS WERE DETERMINED ACCORDING TO ASTM E 90 AND CLASSIFIED ACCORDING TO ASTM E 413 BY A QUALIFIED INDEPENDENT TESTING AGENCY.

C. FIRE-RESISTANCE-RATED ASSEMBLIES: PROVIDE MATERIALS AND CONSTRUCTION IDENTICAL TO ASSEMBLIES TESTED ACCORDING TO ASTM E 119 BY AN INDEPENDENT TESTING AND INSPECTING AGENCY ACCEPTABLE TO AUTHORITIES HAVING JURISDICTION.

PART 2 - PRODUCTS

2.1 METAL FRAMING AND SUPPORTS

A. SUSPENDED AND FURRED CEILINGS: COMPLY WITH ASTM C 645 AND ASTM C 754.
1. WIRE TIES: ASTM A 641 (ASTM A 641M), CLASS 1 ZINC COATING, SOFT TEMPER, 0.062 INCH (1.6 MM) THICK.
2. HANGERS: WIRE, ASTM A 641 (ASTM A 641M), CLASS 1 ZINC COATING, SOFT TEMPER, 0.162-INCH (4.2-MM) DIAMETER.
3. CARRYING CHANNELS: COLD-ROLLED STEEL.
4. FURRING CHANNELS: COLD-ROLLED CHANNELS;STEEL STUDS, 0.0179-INCH- (0.45-MM-) THICK IN DEPTH INDICATED; STEEL RIGID HAT-SHAPED CHANNELS, OR RESILIENT FURRING CHANNELS, WITH SINGLE- OR DOUBLE-LEG CONFIGURATION; SEE DRAWINGS.
5. HOT-DIP GALVANIZED COATING COMPLYING WITH ASTM A 653, G40 (ASTM A 653M, Z90) FOR FRAMING EXTERIOR SOFFITS AND SUSPENDED CEILINGS WITHIN 10 FEET (3 M) OF EXTERIOR WALLS.
6. DIRECT-HUNG GRID SUSPENSION SYSTEM FOR INTERIOR CEILINGS.

B. PARTITIONS: COMPLY WITH ASTM C 645.
1. STUDS AND RUNNERS: AS INDICATED IN DRAWINGS.
2. RIGID HAT-SHAPED FURRING CHANNELS: IN DEPTH INDICATED AND 0.0179-INCH (0.45-MM) THICK, UNLESS OTHERWISE INDICATED.
3. FURRING BRACKETS: ADJUSTABLE SERRATED-ARM TYPE FABRICATED FROM CORROSION-RESISTANT STEEL SHEET 0.0329-INCH (0.84-MM) THICK.
4. RESILIENT FURRING CHANNELS: 1/2-INCH- (12.7-MM-) DEEP, WITH SINGLE- OR DOUBLE-LEG.
5. Z-FURRING: Z-SHAPED MEMBERS WITH FACE FLANGE OF 1-1/4 INCH (31.8 MM), WALL-ATTACHMENT FLANGE OF 7/8 INCH (22.2 MM), AND IN DEPTH REQUIRED BY INSULATION.
6. HOT-DIP GALVANIZED COATING COMPLYING WITH ASTM A 653, G40 (ASTM A 653M, Z90) FOR FRAMING MEMBERS ATTACHED TO AND WITHIN 10 FEET (3 M) OF EXTERIOR WALLS.

2.2 GYPSUM BOARD

A. GYPSUM BOARD PRODUCTS IN MAXIMUM LENGTHS AVAILABLE TO MINIMIZE END-TO-END BUTT JOINTS.
1. GYPSUM WALLBOARD: ASTM C 36, IN THICKNESS INDICATED, WITH MANUFACTURER'S STANDARD EDGES. REGULAR TYPE, UNLESS OTHERWISE INDICATED.
2. EXTERIOR GYPSUM SOFFIT BOARD: ASTM C 931, IN THICKNESS INDICATED, WITH MANUFACTURER'S STANDARD EDGES. REGULAR TYPE, UNLESS OTHERWISE INDICATED.
3. WATER-RESISTANT GYPSUM BACKING BOARD: ASTM C 630, IN THICKNESS INDICATED. REGULAR TYPE, UNLESS OTHERWISE INDICATED.

2.3 ACCESSORIES

A. TRIM ACCESSORIES: CORNERBEAD, EDGE TRIM, AND CONTROL JOINTS COMPLYING WITH ASTM C 1047, FORMED FROM STEEL SHEET ZINC COATED BY HOT-DIP PROCESS OR ROLLED ZINC OR PLASTIC.

B. ALUMINUM ACCESSORIES: EXTRUDED-ALUMINUM ACCESSORIES INDICATED WITH MANUFACTURER'S STANDARD CORROSION-RESISTANT PRIMER.

C. GYPSUM BOARD JOINT TREATMENT MATERIALS: COMPLY WITH ASTM C 475. PAPER REINFORCING TAPE AND SETTING-TYPE COMPOUNDS.

D. CEMENTITIOUS BACKER UNITS: ANSI A118.9.

E. CEMENTITIOUS BACKER UNIT JOINT TREATMENT MATERIALS: COMPLY WITH ASTM C 475.

F. ACOUSTICAL SEALANT FOR EXPOSED AND CONCEALED JOINTS: NONSAG, PAINTABLE, NONSTAINING LATEX SEALANT COMPLYING WITH ASTM C 834.

G. SOUND-ATTENUATION BLANKETS: UNFACED MINERAL-FIBER-BLANKET INSULATION COMPLYING WITH ASTM C 665 FOR TYPE I.

H. POLYSTYRENE AGGREGATE TEXTURE FINISH WHERE INDICATED.

I. MISCELLANEOUS MATERIALS: AUXILIARY MATERIALS FOR GYPSUM BOARD CONSTRUCTION THAT COMPLY WITH REFERENCED STANDARDS.

PART 3 - EXECUTION

3.1 INSTALLATION

A. INSTALL STEEL FRAMING TO COMPLY WITH ASTM C 754 AND WITH ASTM C 840 REQUIREMENTS THAT APPLY TO FRAMING INSTALLATION.
1. ISOLATE STEEL FRAMING FROM BUILDING STRUCTURE, EXCEPT AT FLOOR, TO PREVENT STRUCTURAL MOVEMENT FROM TRANSFERRING LOADING TO PARTITIONS.
2. WHERE STUDS ARE INSTALLED DIRECTLY AGAINST EXTERIOR WALLS, INSTALL ASPHALT FELT STRIPS OR FOAM GASKETS BETWEEN STUDS AND WALL.

B. INSTALL AND FINISH GYPSUM PANELS TO COMPLY WITH ASTM C 840 AND GA-216.
1. ISOLATE THE PERIMETER OF NON-LOAD-BEARING GYPSUM BOARD PARTITIONS WHERE THEY ABUT STRUCTURAL ELEMENTS, EXCEPT FLOORS, BY PROVIDING A 1/4- TO 1/2-INCH- (6.4- TO 12.7-MM-) WIDE SPACE BETWEEN GYPSUM BOARD AND THE

STRUCTURE. TRIM EDGES WITH U-BEAD EDGE TRIM WHERE EDGES OF GYPSUM PANELS ARE EXPOSED. SEAL JOINTS BETWEEN EDGES AND ABUTTING STRUCTURAL SURFACES WITH ACOUSTICAL SEALANT.
2. STC-RATED ASSEMBLIES: COMPLY WITH ASTM C 919 FOR LOCATION OF EDGE TRIM AND CLOSING OFF SOUND-FLANKING PATHS AROUND OR THROUGH GYPSUM BOARD ASSEMBLIES.
3. FIRE-RESISTANCE-RATED ASSEMBLIES: COMPLY WITH REQUIREMENTS OF LISTED ASSEMBLIES.
4. CEMENTITIOUS BACKER UNITS: COMPLY WITH ANSI A108.11.
5. SINGLE-LAYER FASTENING METHODS: FASTEN GYPSUM PANELS TO SUPPORTS WITH SCREWS.
6. MULTILAYER FASTENING METHODS: FASTEN PER SPECIFIED ASSEMBLY REQUIREMENTS

C. FINISHING GYPSUM BOARD ASSEMBLIES: LEVEL 4 FINISH, UNLESS OTHERWISE INDICATED.

END OF SECTION 09260

SECTION 09900 - PAINTING

PART 1 - GENERAL

1.1 SECTION REQUIREMENTS

A. SUMMARY: PAINT ALL EXPOSED SURFACES, UNLESS OTHERWISE INDICATED.
1. PAINT THE BACK SIDE OF ACCESS PANELS.
2. COLOR CODE MECHANICAL PIPING IN ACCESSIBLE CEILING SPACES.
3. DO NOT PAINT PREFINISHED ITEMS, FINISHED METAL SURFACES, OPERATING PARTS, LABELS, AND MATERIALS OBVIOUSLY INTENDED TO BE LEFT EXPOSED SUCH AS BRICK AND TILE.
4. UNLESS OTHERWISE INDICATED DO NOT PAINT CONCEALED SURFACES.

B. SUBMITTALS: PRODUCT DATA AND COLOR SAMPLES.

C. MOCKUPS: FULL-COAT FINISH SAMPLE (BENCHMARK SAMPLE) OF EACH TYPE OF COATING, SUBSTRATE, COLOR, AND FINISH REQUIRED IN AREA OF NOT LESS THAN 100 SQ. FT (9 SQ. M). COMPLY WITH PDCA P5.

D. OBTAIN BLOCK FILLERS, PRIMERS, AND UNDERCOAT MATERIALS FOR EACH COATING SYSTEM FROM THE SAME MANUFACTURER AS THE FINISH COATS.

E. EXTRA MATERIALS: DELIVER TO OWNER A 1-GAL. (3.8-L) CONTAINER, PROPERLY LABELED AND SEALED, OF EACH COLOR AND TYPE OF FINISH COAT PAINT USED ON PROJECT.

PART 2 - PRODUCTS

2.1 PAINT

A. SEE DRAWINGS
1. COLORS: AS SELECTED OR AS SCHEDULED.

B. MATERIAL QUALITY: MANUFACTURER'S BEST-QUALITY OF COATING TYPES SPECIFIED.

C. MATERIAL COMPATIBILITY: COMPLETE SYSTEM OF COMPATIBLE COMPONENTS THAT IS RECOMMENDED BY MANUFACTURER FOR APPLICATION INDICATED.

PART 3 - EXECUTION

3.1 APPLICATION

A. COMPLY WITH PAINT MANUFACTURER'S WRITTEN INSTRUCTIONS FOR SURFACE PREPARATION, ENVIRONMENTAL AND SUBSTRATE CONDITIONS, PRODUCT MIXING, AND APPLICATION.

3.2 EXTERIOR/INTERIOR PAINT APPLICATION SCHEDULE

A. AS SHOWN BELOW AND ON DRAWINGS, IF NOT SHOWN, TO BE SPECIFIED BY OWNERS REP.

B. EXTERIOR WOOD - PAINTED
1. 1ST COAT - ALKYD EXTERIOR PRIMER
2. 2ND COAT - LATEX EXTERIOR TRIM
3. 3RD COAT - LATEX EXTERIOR TRIM

C. EXTERIOR CONCRETE, CONCRETE BLOCK, CEMENT PLASTER (STUCCO) AND EFIS
1. 1ST COAT - ACRYLIC MASONRY SEALER
2. 2ND COAT - LATEX EXTERIOR
3. 3RD COAT - LATEX EXTERIOR

D. EXTERIOR GYPSUM BOARD SOFFITS
1. 1ST COAT - LATEX EXTERIOR
2. 2ND COAT - LATEX EXTERIOR

E. EXTERIOR STEEL - SHOP PRIMED
1. TOUCH-UP PRIMER - ALKYD METAL PRIMER
2. 2ND COAT - ACRYLIC GLOSS ENAMEL
3. 3RD COAT - ACRYLIC GLOSS ENAMEL

F. EXTERIOR STEEL - GALVANIVED
1. 1ST COAT - ACRYLIC METAL PRIMER
2. 2ND COAT - ACRYLIC GLOSS ENAMEL
3. 3RD COAT - ACRYLIC GLOSS ENAMEL

G. INTERIOR WOOD - PAINTED
1. 1ST COAT - LATEX PRIMER
2. 2ND COAT - LATEX SEMI-GLOSS
3. 3RD COAT - LATEX SEMI-GLOSS

H. INTERIOR CONCRETE, CONCRETE BLOCK, AND CEMENT PLASTER
1. 1ST COAT - LATEX BLOCK FILLER
2. 2ND COAT - LATEX SEMI-GLOSS
3. 3RD COAT - LATEX SEMI-GLOSS

I. INTERIOR STEEL - UNPRIMED
1. 1ST COAT - ALKYD METAL PRIMER
2. 2ND COAT - ACRYLIC GLOSS ENAMEL
3. 3RD COAT - ACRYLIC GLOSS ENAMEL

J. INTERIOR STEEL - PRIMED
1. TOUCH-UP PRIMER - ALKYD METAL PRIMER
2. 2ND COAT - ACRYLIC GLOSS ENAMEL
3. 3RD COAT - ACRYLIC GLOSS ENAMEL

K. INTERIOR STEEL - GALVANIZED
1. 1ST COAT - ALKYD METAL PRIMER
2. 2ND COAT - ACRYLIC GLOSS ENAMEL
3. 3RD COAT - ACRYLIC GLOSS ENAMEL

L. INTERIOR PLASTER - NOT PAINTED UNLESS OTHERWISE NOTED.
M. INTERIOR WALLS - GYPSUM BOARD - NOT PAINTED EXCEPT TOILET ROOM INTERIORS.
N. INTERIOR FIRE RETARDANT
1. 1ST COAT - CODE COMPLIANT, FIRE RETARDANT PAINT

END OF SECTION 09910

FWH Architects

3336 Grand Blvd. Suite 201
Holiday, Florida 34690
Ph. 727. 815. 3336
Fax 727. 815. 3337

TO THE BEST OF THE KNOWLEDGE OF THE ARCHITECTS AND ENGINEERS, PLANS AND SPECIFICATIONS COMPLY WITH THE APPLICABLE MINIMUM BUILDING CODES AND THE APPLICABLE MINIMUM FIRE SAFETY STANDARDS

GUY F. FABER
FL License No. AR0015323

no.	date	revision descriptions

STARBUCKS
SHELL CONSTRUCTION
1990 STATE ROAD 19
TAVARES, FL

03.25.2024
date

24007
comm. no.

SPECIFICATIONS

A0.2

(XX.XX) KEYNOTE SCHEDULE

NOTES:
A. THIS LIST IS FOR REFERENCE TO ALL KEYNOTES USED ON ALL SHEETS
B. NOT ALL NOTES ARE USED ON THE PROJECT

DIVISION 1 - GENERAL

1.10 ROOF PARPET, SEE WALL SECTIONS AND ROOF DETAILS
1.20 BUILDING ELEMENT/CONSTRUCTION BEYOND
1.21 DASHED LINE INDICATES OUTLINE OF ROOF BEYOND OR ABOVE
1.22 RTU BEYOND, SEE ROOF PLAN
1.30 PARAPET BREAK FOR ROOF ACCESS, REFER TO ROOF PLAN
1.40 BULKHEAD OR SOFFIT ABOVE, SEE REFLECTED CEILING PLAN AND/OR WALL SECTIONS
1.41 DASHED LINE INDICATES CANOPY OR AWNING ABOVE (OR BELOW AS APPLICABLE). REFER TO WALL SECTIONS AND EXTERIOR ELEVATIONS
1.42 OUTLINE OF RTU CURB ABOVE
1.50 LINE OF WALL BELOW
1.51 DASHED LINE INDICATES LOCATION OF ROOF JOIST / BEAM BELOW. REFER TO WALL SECTIONS AND STRUCTURAL DRAWINGS

DIVISION 2 - SITE CONSTRUCTION

2.01 PROPERTY OR LOT LINE, REFER TO CIVIL DRAWINGS
2.10 REFER TO CIVIL DRAWINGS FOR ALL PAVEMENT/SURFACING BEYOND BUILDING AND SIDEWALK INCLUDING ALL PAVEMENT MARKINGS, PARKING STRIPPING, HC GRAPHICS, CROSSWALKS AND DIRECTIONAL ARROWS
2.20 CONCRETE SIDEWALK, 4" THICK 3,000 PSI W/ 6 X 6, W1.4 X W1.4 WWM. PROVIDE 12" DEEP X 8" WIDE TURNED DOWN EDGE WITH (1) #5 REBAR CONTINUOUS AT PERIMETER. REFER TO ARCHITECTURAL SITE PLAN ON SHEET A5.1 FOR REQUIREMENTS
2.21 CONCRETE SIDEWALK, REFER TO SEE CIVIL DRAWINGS FOR EXTENTS
2.23 CONCRETE CURB, REFER TO CIVIL DRAWINGS FOR REQUIREMENTS
2.25 6" THICK CONCRETE WITH INTEGRAL COLOR (NUMBER CC150/6 AS MANUFACTURED BY INCRETE SYSTEMS) REQUIRED AT DRIVE-THRU LANE, REFER TO ARCHITECTURAL SITE PLAN AND CIVIL DRAWINGS FOR EXTENTS
2.27 CONCRETE WHEEL STOP, REFER TO CIVIL DRAWINGS
2.30 LANDSCAPE AREA. REFER TO CIVIL AND LANDSCAPE DRAWINGS
2.33 DASHED LINE INDICATES PVC DRAIN FROM LANDSCAPE AREA THROUGH THICKENED SIDEWALK. DISCHARGE AT FACE OF CURB. REFER TO DETAIL ON SHEET A5.2
2.40 HANDICAP RAMP WITH 1:12 MAXIMUM SLOPE, REFER TO CIVIL DRAWINGS
2.41 FLUSH TRANSITION BETWEEN PARKING AND SIDEWALK FOR HANDICAP ACCESS. PROVIDE DETECTABLE WARNING SURFACE WHERE INDICATED
2.42 EXPOSED AGGREGATE DETECTABLE WARNING SURFACE. REFER TO CIVIL DRAWINGS. IF NOT SPECIFICALLY INDICATED, PROVIDE LARGE AGGREGATE GRAVEL AASHTO #3 OR #57
2.43 PROVIDE CONCRETE PAVERS OVER COMPACTED LIMESTONE BASE. PAVER SHALL BE AS MANUFACTURED BY "TREMRON": 4" THICK PLANK PAVER, COLOR: NATURAL GREY, PATTERN: RUNNING BOND. PROVIDE CLEAR SEALANT. INSTALL 6" WIDE X 18" CONCRETE RIBBON CURB AT PERIMETER
2.50 HANDICAPPED PARKING SIGN. REFER TO CIVIL DRAWINGS
2.60 BIKE RACK, REFER TO DETAILS ON SHEET A5.1
2.62 STEEL PIPE BOLLARD, 6" DIA. SCHEDULE 40 WITH GROUT FILL. PAINT TRAFFIC YELLOW UNLESS OTHERWISE NOTED. REFER TO DETAIL ON SHEET A5.2
2.63 STEEL PIPE BOLLARD, 6" DIA. SCHEDULE 40 WITH GROUT FILL. REFER TO DETAIL ON SHEET A5.2
2.64 RAILING AT OUTDOOR SEATING AREA. MOUNT ON 6" WIDE X 18" DEEP CONCRETE RIBBON CURB. REFER TO DETAILS ON SHEET A5.2. THE FINAL LAYOUT AND DESIGN SHALL BE COORDINATED WITH TENANT PLANS
2.70 "MONUMENT OR PYLON SIGN. REFER TO SIGNAGE NOTES ON SHEET A5.2. REFER TO ELECTRICAL DRAWINGS FOR POWER REQUIREMENTS
2.80 TRANSFORMER ON CONCRETE PAD
2.91 4'-0" HIGH PREFINISHED ALUMINUM PRIVACY SCREEN BY SLEEKFENCE OR EQUAL REFER TO DETAILS ON SHEET A5.1. GENERAL CONTRACTOR SHALL VERIFY THE EXACT CONFIGURATION AND DESIGN WITH TENANT PRIOR TO CONSTRUCTION

DIVISION 3 - CONCRETE

3.04 PROVIDE SOLID CONCRETE FILL AT CMU CELLS BELOW FINISHED FLOOR (OR AS SHOWN)
3.10 CONTINUOUS CONCRETE FOOTING, REFER TO FOUNDATION PLAN AND DETAILS FOR REQUIREMENTS
3.22 SHADED AREA INDICATES CONCRETE SLAB LEAVE-OUT; SLAB BY OTHERS. REFER TO STRUCTURAL FOUNDATION PLAN AND DETAILS
3.24 CONCRETE SLAB BY TENANT, REFER TO FOUNDATION PLAN
3.25 CONCRETE CAP AT FOUNDATION WALL WHERE STOREFRONT OR DOORS OCCUR ADJACENT TO CONCRETE SLAB LEAVE-OUTS. REFER TO WALL SECTIONS AND STRUCTURAL DRAWINGS
3.30 CAST-IN-PLACE CONCRETE BEAM, REFER TO STRUCTURAL DRAWINGS

DIVISION 4 - MASONRY

4.10 CONCRETE MASONRY UNIT (CMU), WIDTH AS INDICATED, REFER TO STRUCTURAL DRAWINGS FOR REINFORCEMENT AND FILLED CELL LOCATIONS
4.12 PRECAST CONCRETE LINTEL, GROUT FILLED WITH GROUT FILLED KNOCK-OUT BLOCK ABOVE (AS APPLICABLE), REFER TO STRUCTURAL DRAWINGS FOR EXACT CONFIGURATION AND REINFORCEMENT REQUIREMENTS
4.13 CMU KNOCK-OUT BLOCK BOND BEAM, GROUT FILLED. REFER TO STRUCTURAL DRAWINGS FOR EXACT CONFIGURATION AND REINFORCEMENT REQUIREMENTS
4.20 THIN BRICK VENEER, REFER TO EXTERIOR FINISH SCHEDULE. PROVIDE THIN BRICK VENEER IN MORTAR BED LIQUID APPLIED WATERPROOFING OVER CMU. IF APPLICABLE, AT FRAMED WALLS, PROVIDE THIN BRICK VENEER OVER MORTAR BED ON PAPER BACKED GALVANIZED WIRE LATH OVER 5/8" CDX PLYWOOD SHEATHING
4.22 BRICK SOLDIER COURSE
4.50 MASONRY CONTROL JOINT

DIVISION 5 - METALS

5.01 AT PERIMETER STUD FURRING, PROVIDE CONTINUOUS TRACK INSTALLED 1/2" ABOVE FINISHED CONCRETE FLOOR SLAB ELEVATION
5.02 AT PERIMETER STUD FURRING, PROVIDE 2" X 2" X 3" HIGH 18 GA. CLIP ANGLE FASTENED WITH (2) #10 TEK SCREWS AND (2) 0.145 DIAMETER POWDER DRIVEN FASTENERS. PROVIDE AND INSTALL CLIP ANGLE AT BOTTOM, MIDDLE AND TOP OF STUD
5.10 STEEL COLUMN, REFER TO STRUCTURAL DRAWINGS
5.11 STEEL BEAM, REFER TO STRUCTURAL DRAWINGS
5.12 STEEL ANGLE, REFER TO STRUCTURAL DRAWINGS
5.13 STEEL CHANNEL, REFER TO STRUCTURAL DRAWINGS
5.14 H.S.S. FRAMING, REFER TO STRUCTURAL DRAWINGS
5.30 METAL ROOF OR FLOOR DECK, REFER TO STRUCTURAL DRAWINGS
5.40 METAL STUD FRAMING (WIDTH AS INDICATED), REFER TO STRUCTURAL DRAWINGS FOR GAUGE, SPACING AND CONNECTION DETAILS
5.45 7/8" METAL HAT CHANNEL FURRING AT 24" O.C. (VERTICAL)
5.50 ALUMINUM ROOF ACCESS LADDER WITH LOCKABLE SECURITY GATE. REFER TO EXTERIOR ELEVATIONS AND DETAIL ON SHEET A5.1
5.60 STEEL FRAMED EQUIPMENT SCREEN. REFER TO ROOF PLAN, EXTERIOR ELEVATIONS AND STRUCTURAL DRAWINGS
5.70 18 GAUGE FLAT STOCK METAL FABRICATED TO WRAP OUTSIDE CORNER
5.80 VERTICAL WALL REINFORCEMENT IN GROUT FILLED CELL, TYP. REFER TO STRUCTURAL DRAWINGS

DIVISION 6 - WOOD AND PLASTICS

6.10 PT 2 X WOOD BLOCKING, BUCK OR DRAFT STOP
6.11 PT 1 X WOOD BLOCKING OR BUCK
6.12 PT WOOD SHIM AS REQUIRED
6.15 PT 2 X WOOD PLATE WITH 1/2" DIAMETER ANCHOR BOLTS (6" MINIMUM EMBEDMENT) AT 4'-0" O.C. MAXIMUM. IN LIEU OF SPECIFIED ANCHOR BOLT, 1/4" DIA. X 4" LONG TAPCONS STAGGERED AT 24" O.C. MAY BE PROVIDED FOR PLATE ATTACHMENT. FASTENERS SHALL BE PLACED MINIMUM 2 1/2" FROM EDGE OF WOOD PLATE
6.21 5/8" CDX PLYWOOD, REFER TO STRUCTURAL DRAWINGS AS REQUIRED

DIVISION 7 - THERMAL AND MOISTURE PROTECTION

7.03 COMPRESSIBLE FILLER (3/4" MAX.) CUT BACK EXCESS BELOW SLAB AND PROVIDE SEALANT BEAD, CONTINUOUS. DO NOT PLUG WEEP HOLES
7.04 PROVIDE ROOFTOP WALKWAY PADS AS SHOWN AND AROUND ALL ROOFTOP EQUIPMENT
7.07 PROVIDE LIQUID BITUMINOUS DAMP-PROOFING AT PLYWOOD SURFACES PRIOR TO INSTALLATION OF ALUMINUM BREAKMETAL
7.08 SEALANT AND BACKER ROD, CONTINUOUS. SEALANT COLOR TO MATCH ADJACENT MATERIAL AS APPLICABLE
7.09 SEALANT BEAD, CONTINUOUS. SEALANT COLOR TO MATCH ADJACENT MATERIAL AS APPLICABLE
7.10 INSTALL CONTINUOUS SILL FLASHING TO SLAB EDGE AND TURN DOWN. PROVIDE FLASHING END CAPS AT JAMB TERMINATION. SET IN SEALANT
7.12 SINGLE-PLY ROOF MEMBRANE OVER (R-25) RIGID INSULATION, REFER TO SPECIFICATIONS
7.13 SINGLE-PLY ROOF MEMBRANE FULLY ADHERED TO REAR FACE OF PARAPET (OR CURB). EXTEND FROM TOP OF COUNTERFLASHING (OR ROOF AS APPLICABLE), OVER PARAPET AND TERMINATE BEHIND HOLD DOWN CLEAT
7.16 MANUFACTURER APPROVED PLATES FASTENED WITH MANUFACTURER APPROVED FASTENERS
7.18 HEAT WELDED SEAM AT SINGLE-PLY MEMBRANE
7.30 PREFINISHED ALUMINUM DOWNSPOUT (SIZE AS INDICATED ON ROOF PLAN) WITH STRAPS AT 6'-0" O.C. MAX., REFER TO EXTERIOR ELEVATIONS AND ROOF PLAN. WHERE APPLICABLE, EXTEND BELOW GRADE TO STORM SEWER PER CIVIL DRAWINGS AND PROVIDE CAST TRANSITION BOOT WITH CLEANOUT. J.R. HOE AND SONS A-SERIES. SEE DETAIL ON SHEET A5.1
7.32 PREFINISHED ALUMINUM CONDUCTOR HEAD, 16" WIDE X 12" HIGH X 10" DEEP. REFER TO ROOF PLAN AND DETAILS
7.33 PREFINISHED ALUMINUM SCUPPER / EMERGENCY OVERFLOW SCUPPER, 1'-0" WIDE X 8" HIGH, UNLESS OTHERWISE NOTED ON ROOF PLAN. REFER TO ROOF PLAN AND DETAILS
7.55 TAPERED INSULATION, WITH 1/2" PER FOOT MINIMUM SLOPE. PROVIDE AT LOCATIONS INDICATED INCLUDING ALL ROOF MOUNTED EQUIPMENT CURBS
7.60 PROVIDE TYVEK COMMERCIAL WRAP AT FRAMED SUBSTRATES AND FLUID APPLIED TYVEK AT CMU BEHIND COMPOSITE WALL PANELS. LAP SHEETS AND FLASH OPENINGS PER MANUFACTURER'S INSTRUCTIONS
7.61 COMPOSITE WALL PANEL SYSTEM (CWPS), REFER TO EXTERIOR FINISH SCHEDULE AND SPECIFICATIONS
7.62 CWPS CORNER KEY TRIM, PAINTED. (PRE-FORMED CWPS CORNERS NOT ACCEPTABLE)
7.63 CWPS STARTER TRACK
7.64 CWPS CLIP
7.65 CWPS SPACER
7.70 PROVIDE CUSTOM ALUMINUM TRIM AT CWPS TERMINATION, PAINTED. COORDINATE WITH CWPS SUBCONTRACTOR
7.80 PREFINISHED ALUMINUM COPING, SLOPED TO FACILITATE DRAINAGE. PROVIDE WITH COPED SEAMS PER NRCA "J5 THRU "J12". SEE TYP. ROOF DETAILS. REFER TO EXTERIOR FINISH SCHEDULE FOR COLOR
7.87 MECHANICAL FASTENER WITH NEOPRENE WASHER
7.88 FLASHING AT ROOF SIDE OF SCUPPER OPENING
7.95 PROVIDE (3) ONE INCH DIAMETER OVERFLOW HOLES

DIVISION 8 - DOORS AND WINDOWS

8.01 IN FLORIDA LOCATIONS, ALUMINUM STOREFRONT ENTRANCE SYSTEMS SHALL PER INSTALLED WITH ANCHORS AS STIPULATED IN THE MANUFACTURER'S FLORIDA PRODUCT APPROVAL DATA. REFER TO THE FLORIDA PRODUCT APPROVAL INDEX ON SHEET A0 FOR THE APPROPRIATE FLORIDA PRODUCT NUMBER
8.04 PREFINISHED ALUMINUM BREAK METAL TO MATCH ALUMINUM STOREFRONT FRAME COMPONENTS FULLY ADHERED TO PLYWOOD WITH EXTERIOR GRADE CONSTRUCTION ADHESIVE
8.10 ALUMINUM STOREFRONT SYSTEM, REFER TO FRAME OPENING SCHEDULE
8.11 ALUMINUM STOREFRONT ENTRANCE SYSTEM, REFER TO FRAME OPENING SCHEDULE
8.12 DRIVE-THRU WINDOW UNIT, REFER TO FRAME OPENING SCHEDULE AND ELECTRICAL DRAWINGS
8.20 HOLLOW METAL DOOR AND FRAME, REFER TO FRAME OPENING SCHEDULE. PROVIDE (3) JAMB ANCHORS PER SIDE
8.50 ADA COMPLIANT ALUMINUM THRESHOLD, 1/4" HIGH X 4" WIDE X FULL LENGTH OF OPENING. THRESHOLD SHALL HAVE BEVELED EDGES AND SHALL BE RIBBED. SET IN BED OF SEALANT
8.57 RAIN DRIP, REFER TO HARDWARE SCHEDULE

DIVISION 9 - FINISHES

9.16 PROVIDE 6" 20 GA METAL STUD FURRING WITH R-21 BATT INSULATION AT CAVITY AND 5/8" GWB WITH LEVEL 4 FINISH, PRIMED WHITE. EXTEND ALL FULL HEIGHT TO ROOF DECK
9.20 5/8" GYPSUM WALLBOARD (GWB), MOISTURE RESISTANT IS REQUIRED AT ALL PLUMBING WALLS
9.26 3/4" WIDE X 2" HIGH ALUMINUM REVEAL BY "FRY REGLET", MODEL NO. PCS-75-200 OR APPROVED EQUIVALENT. WHERE NOT SPECIFIED TO BE PREFINISHED, PROVIDE FACTORY PRIMER FOR PAINT FINISH IN FIELD
9.40 ACRYLIC (EIFS) FINISH COAT OVER 3/4" CEMENT PLASTER BASE OVER CMU. REFER TO EXTERIOR ELEVATIONS FOR TEXTURE AND COLOR REQUIREMENTS
9.42 DIRECT APPLIED EIFS ACRYLIC FINISH COAT AT LOCATIONS OF EXPOSED FOUNDATION OR CMU STEM WALL
9.44 CONTROL JOINT IN CEMENT PLASTER, "W" SHAPE. 'CLARK DIETRICH BUILDING SYSTEMS' #15 ZINC DOUBLE-V CONTROL JOINT WITH EXPANDED WIRE MESH FLANGES
9.46 GWB OR CEMENT PLASTER CORNER BEAD
9.47 GWB OR CEMENT PLASTER "J" MOLD, FINISH TO MATCH WALL OR CEILING SURFACE
9.49 CEMENT PLASTER FOUNDATION WEEP SCREED
9.52 EXPOSED STRUCTURE, NO CEILING REQUIRED

DIVISION 10 - SPECIALITIES

10.09 CANOPY MOUNTED SIGN TO BE PERMITTED AND INSTALLED BY TENANT'S SIGN VENDOR. SHELL G.C. SHALL REFER TO ELECTRICAL DRAWINGS FOR POWER REQUIREMENTS. ALL CONDUIT SHOULD BE CONCEALED WITHIN THE CANOPY. SEAL ALL WALL PENETRATIONS. SHELL G.C. TO ASSIST WITH COORDINATION BETWEEN CANOPY AND SIGN VENDORS.
10.10 SIGN LOCATION. SIGN TO BE PERMITTED AND INSTALLED BY TENANT'S SIGN VENDOR. SHELL G.C. SHALL REFER TO ELECTRICAL FOR POWER REQUIREMENTS. PROVIDE 5/8" CDX PLYWOOD SHEATHING IN LIEU OF DENSGLASS SHEATHING WHERE APPLICABLE AT SIGN LOCATIONS. RUN ALL CONDUIT TIGHT TO ROOF STRUCTURE. SEAL ALL WALL PENETRATIONS
10.11 TENANT ADDRESS/SPACE NUMBER. PROVIDE MIN. 6" HIGH NUMBERS (IN CONTRASTING COLOR TO BACKGROUND) SO THAT NUMBERS ARE PLAINLY VISIBLE FROM THE STREET
10.12 FUTURE PRE-MENU BOARD, FURNISHED AND INSTALLED BY TENANT. GENERAL CONTRACTOR TO LOCATE AND INSTALL CONCRETE FOUNDATION AND CONDUIT PER TENANT PLANS. REFER TO ELECTRICAL DRAWINGS AND FINAL TENANT PLANS FOR REQUIREMENTS
10.13 FUTURE SPEAKER POST, FURNISHED AND INSTALLED BY TENANT. GENERAL CONTRACTOR TO LOCATE AND INSTALL CONCRETE FOUNDATION AND CONDUIT PER TENANT PLANS. REFER TO ELECTRICAL DRAWINGS AND FINAL TENANT PLANS FOR REQUIREMENTS
10.14 FUTURE MENU BOARD, FURNISHED AND INSTALLED BY TENANT. GENERAL CONTRACTOR TO LOCATE AND INSTALL CONCRETE FOUNDATION AND CONDUIT PER TENANT PLANS. REFER TO ELECTRICAL DRAWINGS AND FINAL TENANT PLANS FOR REQUIREMENTS
10.16 FUTURE ORDERING CANOPY, DIGITAL ORDER SCREEN AND DIGITAL CONTROL BOX FURNISHED AND INSTALLED BY TENANT. GENERAL CONTRACTOR TO LOCATE AND INSTALL CONCRETE FOUNDATION AND CONDUIT PER TENANT PLANS. REFER TO ELECTRICAL DRAWINGS AND FINAL TENANT PLANS FOR REQUIREMENTS
10.17 FUTURE HEIGHT RESTRICTION BAR, FURNISHED AND INSTALLED BY TENANT. GENERAL CONTRACTOR TO LOCATE AND INSTALL CONCRETE FOUNDATION PER TENANT PLANS. REFER TO ELECTRICAL DRAWINGS AND FINAL TENANT PLANS FOR REQUIREMENTS
10.18 TRAFFIC DETECTOR LOOP, FURNISHED BY TENANT AND INSTALLED BY GC. GENERAL CONTRACTOR TO LOCATE AND INSTALL CONDUIT PER TENANT PLANS. REFER TO ELECTRICAL DRAWINGS AND FINAL TENANT PLANS FOR REQUIREMENTS
10.19 FUTURE ILLUMINATED DIRECTIONAL SIGN, FURNISHED AND INSTALLED BY TENANT. GENERAL CONTRACTOR TO LOCATE AND INSTALL CONCRETE FOUNDATION AND CONDUIT PER TENANT PLANS. REFER TO ELECTRICAL DRAWINGS AND FINAL TENANT PLANS FOR REQUIREMENTS
10.25 FUTURE MOBILE ORDER PAY (M.O.P.) PARKING SIGN, FURNISHED BY TENANT INSTALLED BY LANDLORD'S GC. COORDINATE DETAILS WITH TENANT INTERIOR PLANS
10.50 KNOX BOX, RECESS MOUNTED. COORDINATE EXACT MODEL AND MOUNTING LOCATION WITH FIRE MARSHAL
10.60 FIRE EXTINGUISHER, 5LB 2A-10B:C ON SURFACE MOUNTED WALL BRACKET

DIVISION 11 - EQUIPMENT

11.01 DUMPSTER ENCLOSURE, SEE CIVIL DRAWINGS AND DETAILS ON SHEET A5.2

DIVISION 13 - SPECIAL CONSTRUCTION

13.21 PRE-ENGINEERED, COLUMN SUPPORTED ALUMINUM CANOPY, PREFINISHED. SEE DETAILS ON SHEET A1.3
13.22 PRE-ENGINEERED SUSPENDED ALUMINUM CANOPY, PREFINISHED. SEE DETAILS ON SHEET A1.3
13.25 PRE-ENGINEERED CANOPY COLUMN, PREFINISHED SEE DETAILS ON SHEET A1.3
13.40 PAPERSTONE (GRAPHITE) DRIVE THROUGH WINDOW SHELF AND STAINLESS STEEL SUPPORT BRACKETS, INSTALL CENTERED ON WINDOW. SHELF BRACKETS TO BE SUPPLIED BY READY ACCESS WINDOW MANUFACTURED AND INSTALLED BY GENERAL CONTRACTOR

DIVISION 15 - MECHANICAL

15.10 ROOFTOP HVAC UNIT AND CURB. SEE ROOF PLAN, MECHANICAL AND STRUCTURAL DRAWINGS. REFER TO CURB DETAIL ON SHEET A1.2A. ALL RTU'S TO BE LOCATED 10'-0" MINIMUM FROM PARAPET WALLS. COORDINATE RTU LOCATIONS WITH ROOF FRAMING PLAN (EXACT LOCATIONS MAY BE SHIFTED TO ALIGN WITH ROOF FRAMING LAYOUT)
15.13 ROOF MOUNTED STAND/RACK FOR CONDENSING UNIT, REFER TO DETAIL ON SHEET A1.2A AND TO STRUCTURAL AND MECHANICAL DRAWINGS
15.41 GREASE INTERCEPTOR, REFER TO CIVIL AND PLUMBING DRAWINGS
15.50 VENT THRU ROOF (VTR), REFER TO PLUMBING DRAWINGS AND DETAIL ON SHEET A1.2A. LOCATE VTR SO 15'-0" MINIMUM FROM RTU FRESH AIR INTAKES. COORDINATE IN FIELD
15.51 ROOF MOUNTED EXHAUST FAN, REFER TO MECHANICAL AND ELECTRICAL DRAWINGS
15.64 PROVIDE RECESSED, FROST-FREE HOSE BIBB IN KEYED BOX. REFER TO PLUMBING DRAWINGS. VERIFY LOCATION WITH STARBUCKS REPRESENTATIVE PRIOR TO ROUGH-IN

DIVISION 16 - ELECTRICAL

16.02 PROVIDE JUNCTION BOX FOR CEILING FAN TO BE PROVIDED BY TENANT, REFER TO ELECTRICAL DRAWINGS
16.10 LOCATION OF ELECTRIC SERVICE AND HOUSE PANEL. REFER TO ELECTRICAL DRAWINGS. WHERE APPLICABLE, PROVIDE 5/8" CDX PLYWOOD SHEATHING IN LIEU OF DENSGLASS SHEATHING. PAINT ALL EQUIPMENT AND CONDUIT TO MATCH ADJACENT WALL COLOR
16.20 ELECTRICAL PANEL, REFER TO ELECTRICAL DRAWINGS. WHERE APPLICABLE, CONFIRM PLACEMENT WITH TENANT
16.31 DECORATIVE LIGHT FIXTURE, REFER TO ELECTRICAL DRAWINGS
16.32 RECESS MOUNTED EXTERIOR DOWN LIGHT FIXTURE, REFER TO ELECTRICAL DRAWINGS
16.33 EMERGENCY LIGHT FIXTURE, REFER TO ELECTRICAL DRAWINGS
16.34 EXIT SIGN / EMERGENCY LIGHT COMBINATION FIXTURE, REFER TO ELECTRICAL DRAWINGS
16.35 WALL MOUNTED EXTERIOR LIGHT FIXTURE, REFER TO ELECTRICAL DRAWINGS
16.50 POLE MOUNTED SITE LIGHTING FIXTURE, REFER TO ELECTRICAL DRAWINGS. COORDINATE INSTALLATION WITH CIVIL DRAWINGS

FWH Architects
3336 Grand Blvd. Suite 201
Holiday, Florida 34690
Ph. 727. 815. 3336
Fax 727. 815. 3337

TO THE BEST OF THE KNOWLEDGE OF THE ARCHITECTS AND ENGINEERS, PLANS AND SPECIFICATIONS COMPLY WITH THE APPLICABLE MINIMUM BUILDING CODES AND THE APPLICABLE MINIMUM FIRE SAFETY STANDARDS

GUY F. FABER
FL License No. AR0015323

no.	date	revision descriptions

STARBUCKS
SHELL CONSTRUCTION
1990 STATE ROAD 19
TAVARES, FL

03.25.2024
date

24007
comm. no.

KEYNOTE SCHEDULE

A0.3

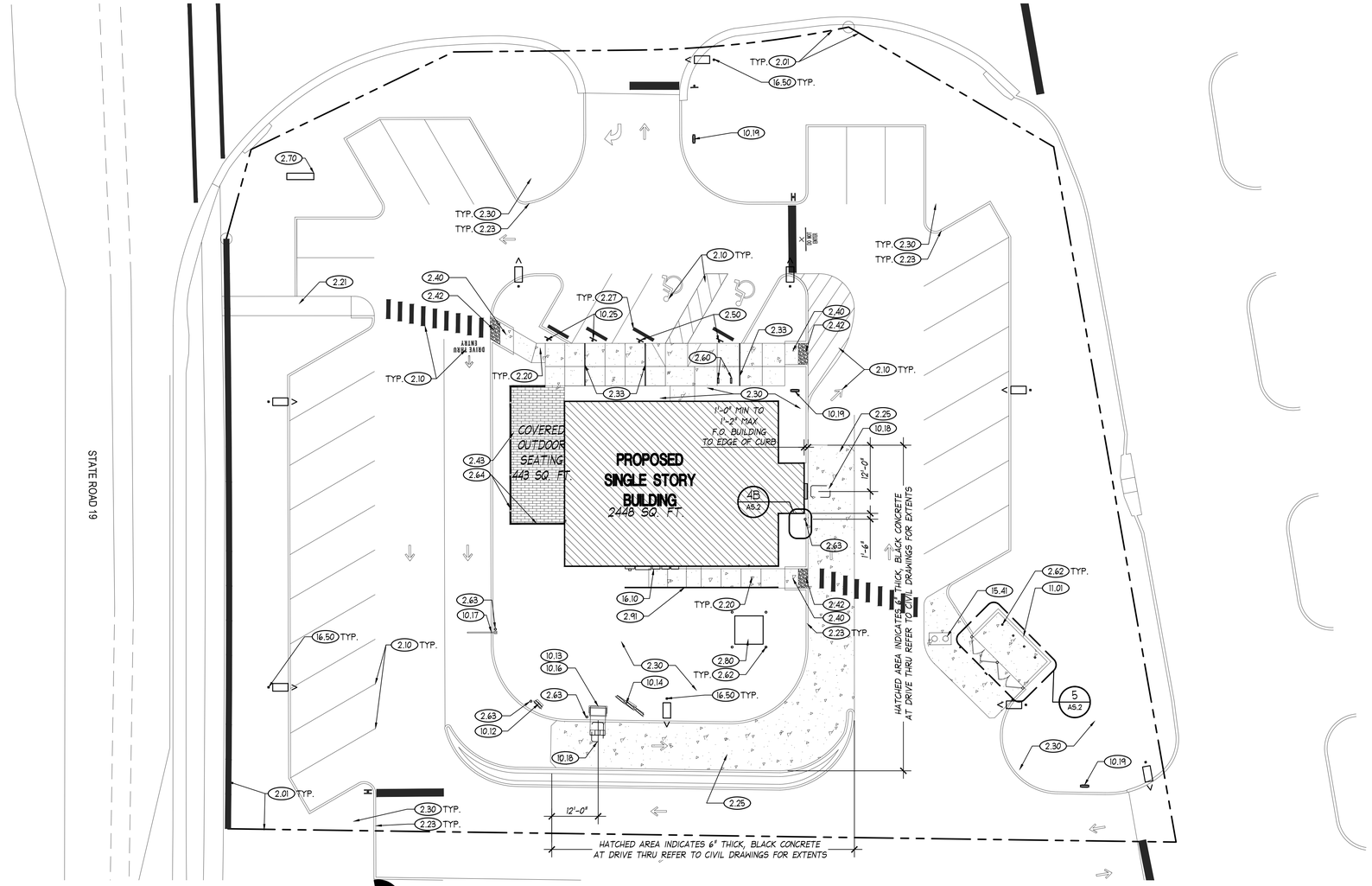

ARCHITECTURAL SITE PLAN

SCALE: 1/16" = 1'-0"

OLYMPIA BIKE RACK

SURFACE MOUNT INSTALLATION INSTRUCTIONS

RECOMMENDED BICYCLE RACK SPACING PER ASSOCIATION OF PEDESTRIAN AND BICYCLE PROFESSIONALS (APBP) GUIDELINES FOR ALL OLYMPIA BIKE RACKS

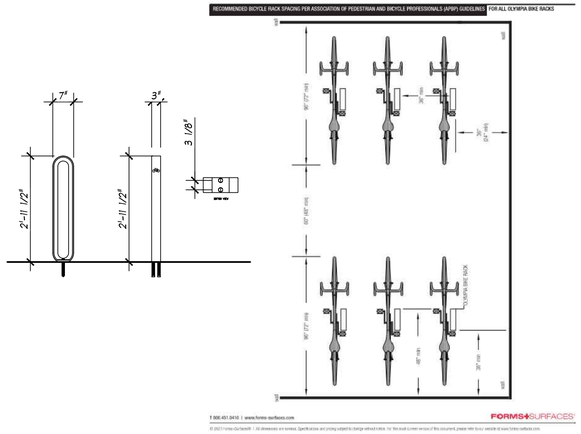

1 BIKE RACK SPECIFICATIONS

NO SCALE

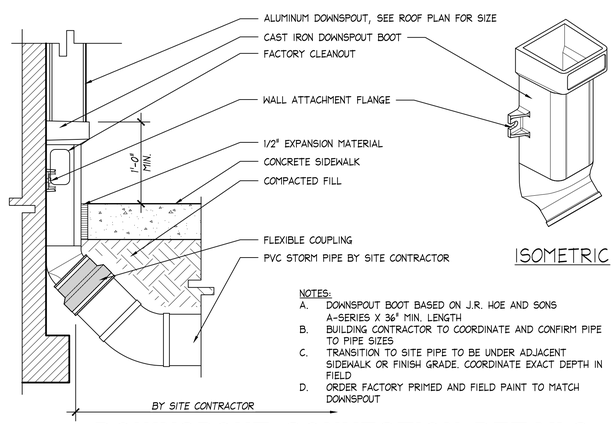

NOTES:

A. DOWNSPOUT BOOT BASED ON J.R. HOE AND SONS A-SERIES X 36" MIN. LENGTH
B. BUILDING CONTRACTOR TO COORDINATE AND CONFIRM PIPE TO PIPE SIZES
C. TRANSITION TO SITE PIPE TO BE UNDER ADJACENT SIDEWALK OR FINISH GRADE. COORDINATE EXACT DEPTH IN FIELD
D. ORDER FACTORY PRIMED AND FIELD PAINT TO MATCH DOWNSPOUT

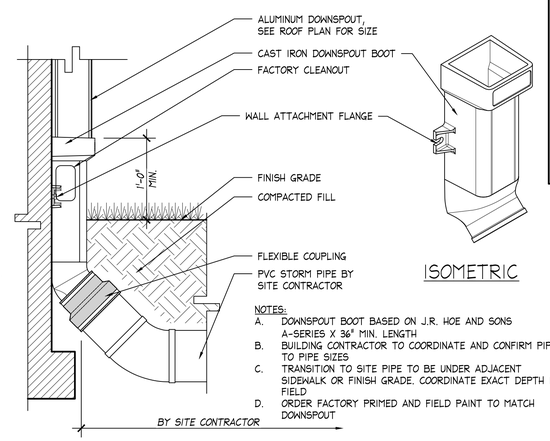

NOTES:

A. DOWNSPOUT BOOT BASED ON J.R. HOE AND SONS A-SERIES X 36" MIN. LENGTH
B. BUILDING CONTRACTOR TO COORDINATE AND CONFIRM PIPE TO PIPE SIZES
C. TRANSITION TO SITE PIPE TO BE UNDER ADJACENT SIDEWALK OR FINISH GRADE. COORDINATE EXACT DEPTH IN FIELD
D. ORDER FACTORY PRIMED AND FIELD PAINT TO MATCH DOWNSPOUT

2 DOWNSPOUT CONNECTION DETAILS

SCALE: 1-1/2" = 1'-0"

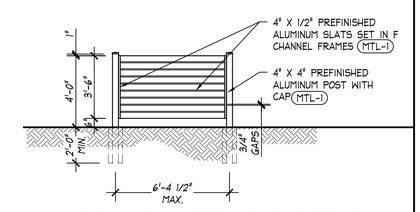

3 PRIVACY FENCE DETAIL

SCALE: 1-1/2" = 1'-0"

GENERAL NOTES

A. SEE REQUIREMENTS FOR EXTERIOR CONCRETE ON THIS SHEET

B. AT THE BUILDING EXTERIOR, THE GC SHALL BE RESPONSIBLE FOR ALL SUB-GRADE ELECTRICAL CONDUIT AND FOUNDATIONS (INCLUDING ANCHOR BOLTS) FOR STARBUCK'S DRIVE-THRU EQUIPMENT AND MISCELLANEOUS SITE ITEMS INCLUDING, BUT NOT LIMITED TO, DIRECTIONAL SIGNAGE, MENU-BOARDS, DETECTOR LOOP, BOLLARDS AND HEIGHT RESTRICTION BAR. REFER TO ELECTRICAL DRAWINGS FOR SPECIFIC REQUIREMENTS FOR CONDUIT RUNS

THE GC SHALL OBTAIN A COMPLETE AND CURRENT SET OF STARBUCK'S INTERIOR FINISH-OUT PLANS. THOSE DOCUMENTS SHALL GOVERN WHEN DETERMINING PRECISE LOCATIONS FOR STARBUCK'S DRIVE-THRU EQUIPMENT AND MISCELLANEOUS SITE ITEMS. DIMENSIONS REQUIRED TO LOCATE THESE ITEMS HAVE BEEN INTENTIONALLY OMITTED IN THESE CONSTRUCTION DOCUMENTS TO AVOID POTENTIAL CONFLICTS WITH STARBUCK'S CONSTRUCTION DOCUMENTS. IN ADDITION, THE STARBUCK'S INTERIOR FINISH-OUT PLANS WILL CONTAIN FOUNDATION DETAILS (INCLUDING ANCHOR BOLTS) AND SPECIFICATIONS FOR THE DRIVE-THRU EQUIPMENT AND MISCELLANEOUS SITE ITEMS. FOR REASONS SIMILAR TO THOSE STATED ABOVE, THESE DETAILS HAVE BEEN OMITTED FROM THE SHELL DOCUMENTS. WHERE INDICATED, THE FOUNDATIONS (INCLUDING ANCHOR BOLTS) ARE, HOWEVER, TO BE THE RESPONSIBILITY OF THE SHELL GENERAL CONTRACTOR.

C. REFER TO CIVIL DRAWINGS FOR THE EXACT DIMENSIONING CONCERNING BUILDING AND SITE LAYOUT EXCEPT ITEMS NOTED ABOVE

D. REFER TO CIVIL DRAWINGS FOR UTILITY SERVICES BEING BROUGHT TO THE BUILDING

REFER TO SHEET A0.3 FOR THE KEYNOTES REFERENCED THROUGHOUT THE CONSTRUCTION DRAWINGS

TO THE FULLEST EXTENT POSSIBLE, BUILDING COMPONENTS WILL BE MARKED AS 'TYPICAL' (TYP.). WHERE SO, KEYED NOTES WILL NOT BE DUPLICATED FOR COMPONENTS OF LIKE KIND. SHOULD THE CONTRACTOR REQUIRE CLARIFICATION OF ANY SUCH COMPONENT, A REQUEST FOR INFORMATION (RFI) SHALL BE SUBMITTED TO THE ARCHITECT PRIOR TO BID.

REFER TO EXTERIOR ELEVATIONS AND WALL SECTIONS FOR EXTERIOR WALL FINISHES

ALL DOWNSPOUTS EXTENDING TO GRADE SHALL BE CONNECTED TO THE UNDERGROUND STORM SEWER UNLESS OTHERWISE NOTED. REFER TO CIVIL DRAWINGS. A CAST IRON TRANSITION BOOT WITH CLEAN OUT SHALL BE PROVIDED FOR THIS CONNECTION. REFER TO DETAIL ON SHEET A5.1

THE GENERAL CONTRACTOR SHALL CLOSELY COORDINATE LOCATIONS OF UNDERGROUND PIPING TO PRECISELY ALIGN WITH ROOF SCUPPERS AND DOWNSPOUTS

REQUIREMENTS FOR EXTERIOR CONCRETE:
DRIVE-THRU LANE:
SHALL BE MINIMUM 6" THICK, 3,000 PSI POURED CONCRETE REINFORCED WITH 6" X 6", W2.8 X W2.8 WWM. REFER TO CIVIL DRAWINGS FOR GRADING. CONCRETE TO RECEIVE INTEGRAL CONCRETE COLOR, NUMBER CC1506 AS MANUFACTURED BY INCRETE SYSTEMS. INSTALL SAWCUT CONCRETE CONTROL JOINTS, 1/8" WIDE X 1 1/2" DEEP, AT 15'-0" O.C. MAX. EACH WAY (AREA NOT TO EXCEED 225 SQ. FT.).

DUMPSTER ENCLOSURE INTERIOR AND APRON:
SHALL BE MINIMUM 6" THICK, 3,000 PSI POURED CONCRETE REINFORCED WITH 6" X 6", W2.8 X W2.8 WWM OVER COMPACTED FILL. PROVIDE 12" DEEP X 12" WIDE TURNED DOWN EDGE W/(1) #5 BAR CONTINUOUS AT PERIMETER OF APRON. INSTALL SAWCUT CONCRETE CONTROL JOINTS, 1/8" WIDE X 1 1/2" DEEP, AT 15'-0" O.C. MAX. EACH WAY (AREA NOT TO EXCEED 225 SQ. FT.).

PERIMETER SIDEWALK: SHALL BE A MINIMUM OF 4" THICK, 3,000 PSI CONCRETE REINFORCED WITH 6" X 6", W1.4 X W1.4 WWM AND 1'-0" DEEP X 8" WIDE THICKENED SLAB EDGE, NATURAL GRAY COLOR. SURFACE TO RECEIVE MEDIUM BROOM FINISH. RETOOL (WITH HAND EDGER) ALL CONTROL JOINTS AND EXPANSION JOINTS AFTER BROOM FINISHING TO ACHIEVE "PICTURE FRAME" IN CONCRETE. THIS SHALL INCLUDE ALL ABUTMENTS TO WALLS, CURBS, COLUMNS, ETC.

SIDEWALK CONTROL JOINTS SHALL BE SEPARATED BY NO MORE THAN 5'-0" IN EITHER DIRECTION WITH PRE-MOLDED EXPANSION JOINTS LOCATED EVERY 20'-0" MAX.

DOMESTIC WATER SERVICE REQUIREMENTS:
THE DOMESTIC WATER SERVICE SHALL BE A MINIMUM OF 50 PSI AND NO GREATER THAN 65 PSI DYNAMIC PRESSURE AT THE POINT OF BUILDING ENTRY. IF THE SERVICE STATIC IS OVER 65 PSI, A PRESSURE REDUCING VALVE TO BE PROVIDED BY THE SHELL GENERAL CONTRACTOR. IF THE PRESSURE IS UNDER 50 PSI AT THE POINT OF ENTRY, A BOOSTER PUMP AND SURGE TANK SHALL BE PROVIDED AND INSTALLED.
IMMEDIATELY UPON INSTALLATION OF THE WATER SERVICE TO THE BUILDING, THE PLUMBING CONTRACTOR SHALL PERFORM A PRESSURE TEST. SHOULD THE PRESSURES NOT MEET THE ABOVE STATED CRITERIA, THE GENERAL CONTRACTOR SHALL PROVIDE RESULTS TO THE ARCHITECT AT THE EARLIEST POSSIBLE DATE. THE ARCHITECT WILL THEN PROVIDE THE NECESSARY DESIGN REMEDIES TO THE CONTRACTOR FOR PRICING, PERMIT AND CONSTRUCTION

SIGNAGE DEPICTED IN THESE DOCUMENTS ARE FOR COORDINATION PURPOSES ONLY. REFER TO ELECTRICAL DRAWINGS WHERE APPLICABLE.

IT SHALL BE UNDERSTOOD THAT ALL EXTERIOR BUILDING MOUNTED AND SITE SIGNAGE WILL BE PERMITTED SEPARATELY BY THE SIGN VENDOR. AT THAT TIME, COMPLETE DETAILS INCLUDING, BUT NOT LIMITED TO, SIGN FABRICATION, SIGN INSTALLATION, SIGN AREA AND QUANTITIES, ETC. WILL BE SUBMITTED FOR PERMIT REVIEW AND APPROVAL PRIOR TO COMMENCEMENT OF WORK

FWH Architects
3336 Grand Blvd. Suite 201
Holiday, Florida 34690
Ph. 727. 815. 3336
Fax 727. 815. 3337

TO THE BEST OF THE KNOWLEDGE OF THE ARCHITECTS AND ENGINEERS, PLANS AND SPECIFICATIONS COMPLY WITH THE APPLICABLE MINIMUM BUILDING CODES AND THE APPLICABLE MINIMUM FIRE SAFETY STANDARDS

GUY F. FABER
FL License No. AR0015323

no.	date	revision descriptions

STARBUCKS
SHELL CONSTRUCTION
1990 STATE ROAD 19
TAVARES, FL

03.25.2024
date

24007
comm. no.

ARCHITECTURAL SITE PLAN

AS.1

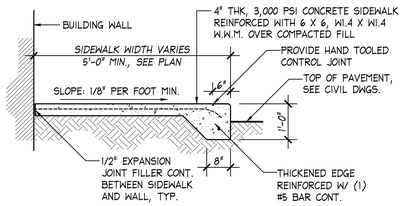

1 CONCRETE SIDEWALK SECTION
SCALE: 1/2" = 1'-0"

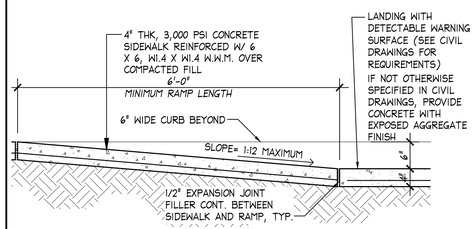

2 HANDICAP RAMP SECTION
SCALE: 3/4" = 1'-0"

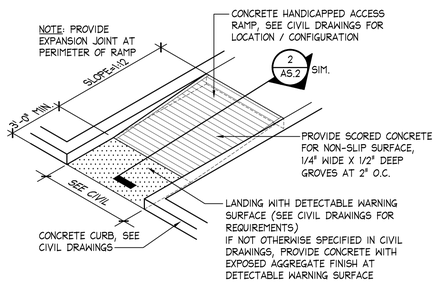

3 HANDICAP RAMP SECTION
NOT TO SCALE

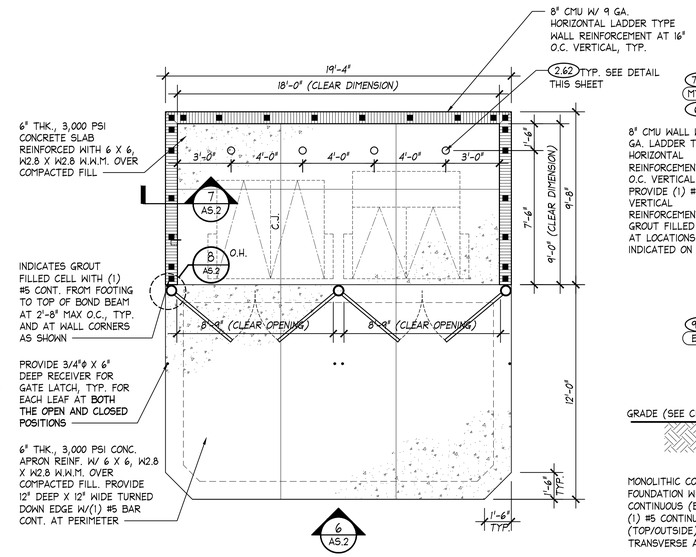

5 DUMPSTER ENCLOSURE PLAN
SCALE: 1/4" = 1'-0"

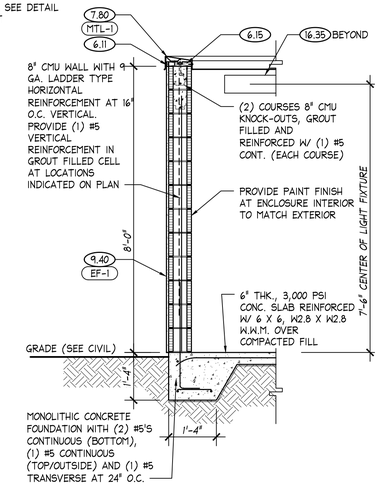

7 DUMPSTER SECTION
SCALE: 1/2" = 1'-0"

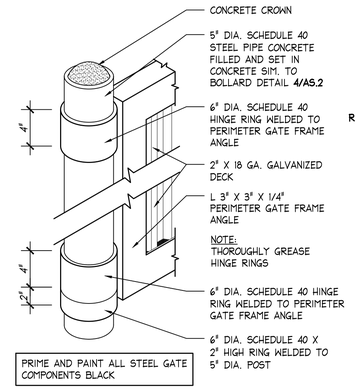

8A GATE POST ISOMETRIC DETAIL
SCALE: 1/2" = 1'-0"

REFER TO SHEET A0.3 FOR THE KEYNOTES REFERENCED THROUGHOUT THE CONSTRUCTION DRAWINGS

TO THE FULLEST EXTENT POSSIBLE, BUILDING COMPONENTS WILL BE MARKED AS 'TYPICAL' (TYP.). WHERE SO, KEYED NOTES WILL NOT BE DUPLICATED FOR COMPONENTS OF LIKE KIND. SHOULD THE CONTRACTOR REQUIRE CLARIFICATION OF ANY SUCH COMPONENT, A REQUEST FOR INFORMATION (RFI) SHALL BE SUBMITTED TO THE ARCHITECT PRIOR TO BID.

GROUND SIGN RESPONSIBILITIES:

THE SHELL GENERAL CONTRACTOR SHALL BE RESPONSIBLE FOR THE FOLLOWING ITEMS REGARDING THE GROUND SIGN(S):

1) POWER SUPPLY TO THE SIGN AS SPECIFIED IN THE ELECTRICAL DRAWINGS

2) THE GROUND SIGN CABINETS (INTERNALLY ILLUMINATED) SHALL BE PERMITTED AND CONSTRUCTED BY A SIGN COMPANY ENGAGED BY THE LANDLORD. GC SHALL LOCATE AND INSTALL CONCRETE FOUNDATION AS SHOWN ON SIGN VENDOR'S PERMIT DRAWINGS

REFER TO THE FINISH SCHEDULE ON SHEET A3.0 FOR EXTERIOR FINISH DESCRIPTIONS

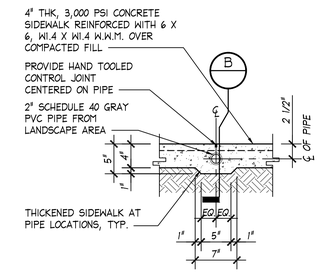

SECTION "A"

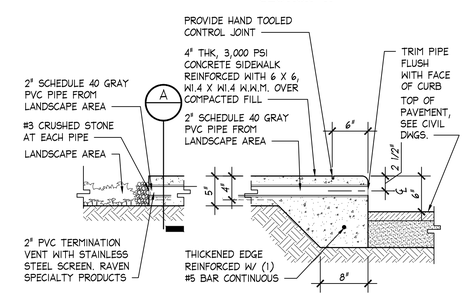

SECTION "B"

12 SIDEWALK DRAIN DETAILS
SCALE: 1" = 1'-0"

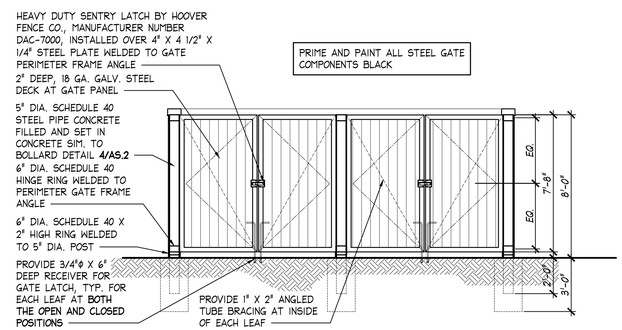

6 DUMPSTER ENCLOSURE ELEVATION
SCALE: 1/4" = 1'-0"

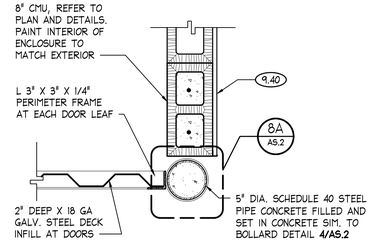

8 GATE POST DETAIL
SCALE: 1" = 1'-0"

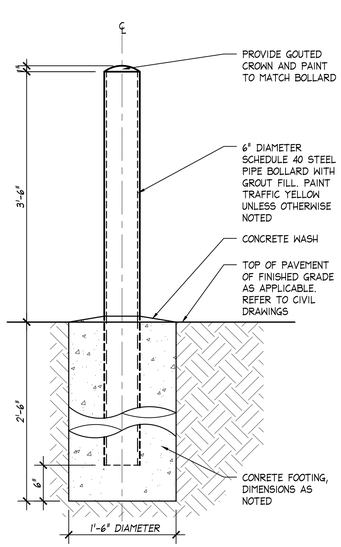

4 BOLLARD DETAIL
SCALE: 1" = 1'-0"

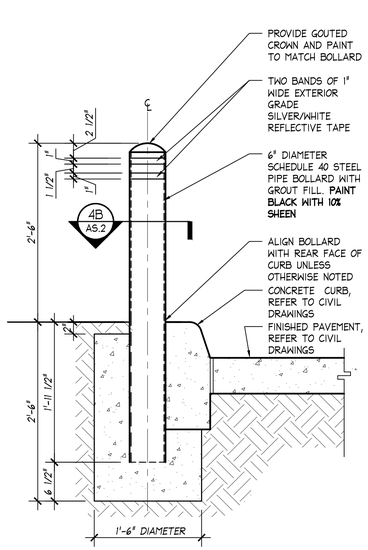

4A BOLLARD DETAIL
SCALE: 1" = 1'-0"

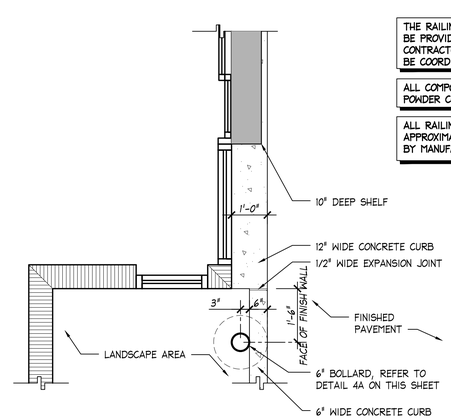

4B BOLLARD PLAN DETAIL AT DRIVE-THRU WINDOW
SCALE: 1/2" = 1'-0"

THE RAILING AT THE OUTDOOR SEATING AREA SHALL BE PROVIDED AND INSTALLED BY THE GENERAL CONTRACTOR. THE FINAL LAYOUT AND DESIGN SHALL BE COORDINATED WITH TENANT PLANS

ALL COMPONENTS SHALL BE PROVIDED WITH A POWDER COAT FINISH, STARBUCKS BLACK

ALL RAILING COMPONENT DIMENSIONS ARE APPROXIMATE. FINAL DIMENSIONS TO BE DETERMINED BY MANUFACTURER

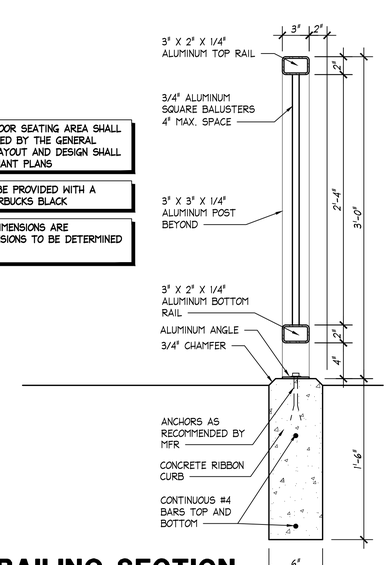

10 RAILING SECTION
SCALE: 1 1/2" = 1'-0"

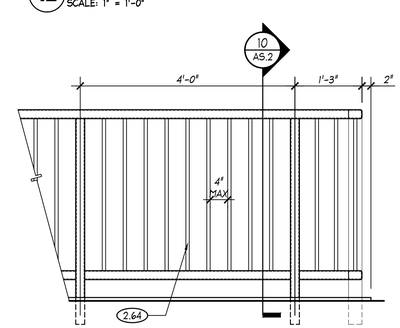

11 RAILING ELEVATION
SCALE: 3/4" = 1'-0"

FWH Architects
3336 Grand Blvd. Suite 201
Holiday, Florida 34690
Ph. 727. 815. 3336
Fax 727. 815. 3337

TO THE BEST OF THE KNOWLEDGE OF THE ARCHITECTS AND ENGINEERS, PLANS AND SPECIFICATIONS COMPLY WITH THE APPLICABLE MINIMUM BUILDING CODES AND THE APPLICABLE MINIMUM FIRE SAFETY STANDARDS

GUY F. FABER
FL License No. AR0015323

no.	date	revision descriptions

STARBUCKS
SHELL CONSTRUCTION
1990 STATE ROAD 19
TAVARES, FL

03.25.2024
date

24007
comm. no.

MISCELLANEOUS SITE DETAILS

AS.2

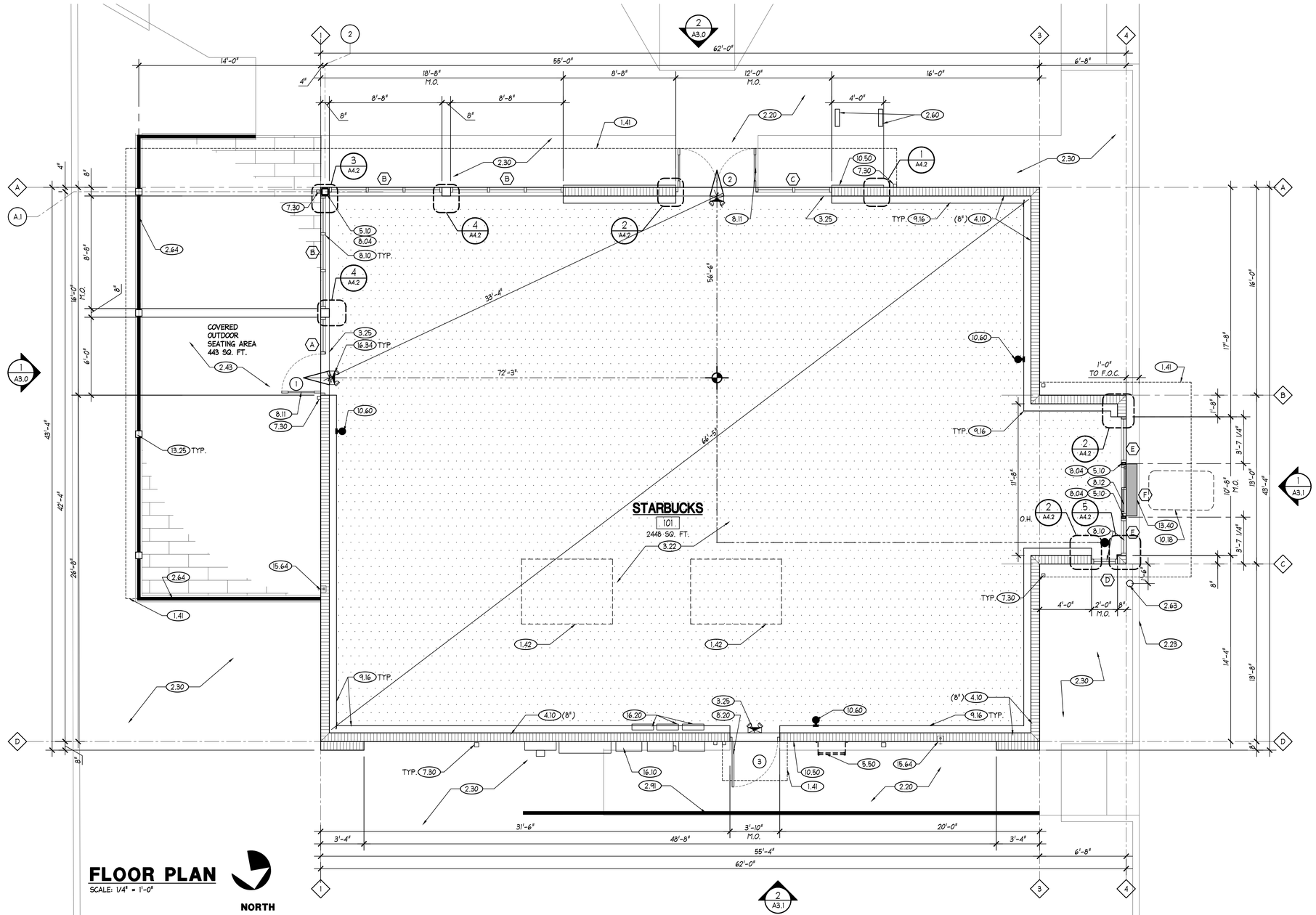

FLOOR PLAN

SCALE: 1/4" = 1'-0"

GENERAL NOTES

REFER TO SHEET A0.3 FOR THE KEYNOTES REFERENCED THROUGHOUT THE CONSTRUCTION DRAWINGS

TO THE FULLEST EXTENT POSSIBLE, BUILDING COMPONENTS WILL BE MARKED AS 'TYPICAL' (TYP.). WHERE SO, KEYED NOTES WILL NOT BE DUPLICATED FOR COMPONENTS OF LIKE KIND. SHOULD THE CONTRACTOR REQUIRE CLARIFICATION OF ANY SUCH COMPONENT, A REQUEST FOR INFORMATION (RFI) SHALL BE SUBMITTED TO THE ARCHITECT PRIOR TO BID.

REFER TO EXTERIOR ELEVATIONS FOR WALL SECTION CUT LOCATIONS AND FOR THE EXTERIOR FINISH SCHEDULE

REFER TO ARCHITECTURAL SITE PLAN AND CIVIL DRAWINGS FOR ALL REQUIREMENTS OUTSIDE OF THE BUILDING LINE

CIVIL DRAWINGS SHALL GOVERN ALL FINISHED GRADE ELEVATIONS AND THE DIMENSIONS OF ALL ITEMS OUTSIDE THE BUILDING INCLUDING, BUT NOT LIMITED TO, SIDEWALKS, PARKING STALLS, LANDSCAPE AREAS AND DRIVE AISLES

1. ALL DIMENSIONS ARE TO FINISHED FACE OF GWB PARTITIONS, FACE OF CMU AND CENTERLINE OF COLUMNS UNLESS OTHERWISE INDICATED

2. SITE RELATED WORK FOR STARBUCKS:

   AT THE BUILDING EXTERIOR, THE GC SHALL BE RESPONSIBLE FOR ALL SUB-GRADE ELECTRICAL CONDUIT AND FOUNDATIONS FOR STARBUCKS SITE ITEMS INCLUDING, BUT NOT LIMITED TO, DIRECTIONAL SIGNAGE, MENU-BOARDS, DETECTOR LOOP, BOLLARDS AND HEIGHT RESTRICTION BAR. REFER TO ELECTRICAL DRAWINGS FOR SPECIFIC REQUIREMENTS.FOR CONDUIT RUNS

   THE GC SHALL OBTAIN A COMPLETE AND CURRENT SET OF STARBUCKS INTERIOR FINISH-OUT PLANS. THOSE DOCUMENTS SHALL GOVERN WHEN DETERMINING PRECISE LOCATIONS FOR STARBUCK'S SITE ITEM'S AND SPECIFICATIONS FOR THEIR FOUNDATIONS. DIMENSIONS REQUIRED TO LOCATE THESE ITEMS HAVE BEEN INTENTIONALLY OMITTED IN THESE CONSTRUCTION DOCUMENTS TO AVOID POTENTIAL CONFLICTS WITH STARBUCKS CONSTRUCTION DOCUMENTS

3. GYPSUM WALLBOARD (GWB) FOR STARBUCKS:

   WHERE INDICATED AT THE STARBUCKS TENANT SPACE, THE GENERAL CONTRACTOR SHALL BE RESPONSIBLE FOR THE INSTALLATION OF 5/8" TYPE 'X' GYPSUM WALLBOARD OVER 6" 20 GA. METAL STUD FURRING AT 16" O.C. WITH BATT INSULATION AT THE CAVITY. SAID CONSTRUCTION SHALL BE PROVIDED AT THE INTERIOR PERIMETER OF THE EXTERIOR WALLS, U.O.N. AND SHALL EXTEND FULL HEIGHT TO ROOF DECK. ALL GWB SURFACES SHALL BE FINISHED TO A LEVEL 4 FINISH, PRIMED WHITE AND READY TO RECEIVE PAINT FINISH BY TENANT

   THE GENERAL CONTRACTOR SHALL COORDINATE INSTALLATION OF GWB WITH STARBUCKS TENANT FINISH-OUT CONTRACTOR AND THEIR ROUGH-IN OF ELECTRICAL AND PLUMBING

WALL LEGEND

8" CMU WALL CONSTRUCTION. REFER TO STRUCTURAL DRAWINGS FOR REINFORCEMENT AND FILLED CELL LOCATIONS. AT INTERIOR, PROVIDE 20 GA. METAL STUD FURRING AT 16" O.C. WITH BATT INSULATION AT CAVITY AND 5/8" TYPE 'X' GWB, ALL FULL HEIGHT TO ROOF DECK. GENERAL CONTRACTOR SHALL COORDINATE INSTALLATION OF GWB WITH TENANT'S ROUGH-IN. SEE ADDITIONAL NOTES THIS SHEET

LIFE SAFETY LEGEND

MOST REMOTE POINT IN SPACE
PATH OF EGRESS TRAVEL
POINT OF EGRESS
TRAVEL DISTANCE
XX'-X"
POINT OF EXIT CHOICE

FIRE EXTINGUISHER, 5LB 2A-10B:C ON SURFACE MOUNTED WALL BRACKET

EXIT SIGN / EMERGENCY LIGHT COMBINATION FIXTURE, REFER TO ELECTRICAL DRAWINGS

DOOR SYMBOL, REFER TO SHEET A4.0 FOR DOOR AND HARDWARE SCHEDULE

LIGHTWEIGHT TRUSS SIGNAGE

F.A.C. 69A-60.0081 NOTICE REQUIRED FOR STRUCTURES WITH LIGHT-FRAME TRUSS-TYPE CONSTRUCTION

NOTE: THIS BUILDING **DOES NOT** CONTAIN PRIMARY STRUCTURAL ELEMENTS WHICH ARE OF LIGHT-FRAME TRUSS-TYPE CONSTRUCTION

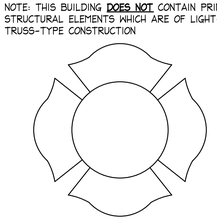

FWH Architects
3336 Grand Blvd. Suite 201
Holiday, Florida 34690
Ph. 727. 815. 3336
Fax 727. 815. 3337

TO THE BEST OF THE KNOWLEDGE OF THE ARCHITECTS AND ENGINEERS, PLANS AND SPECIFICATIONS COMPLY WITH THE APPLICABLE MINIMUM BUILDING CODES AND THE APPLICABLE MINIMUM FIRE SAFETY STANDARDS

GUY F. FABER
FL License No. AR0015323

no.	date	revision descriptions

STARBUCKS
SHELL CONSTRUCTION
1990 STATE ROAD 19
TAVARES, FL

03.25.2024
date

24007
comm. no.

FLOOR PLAN AND NOTES

A1.0

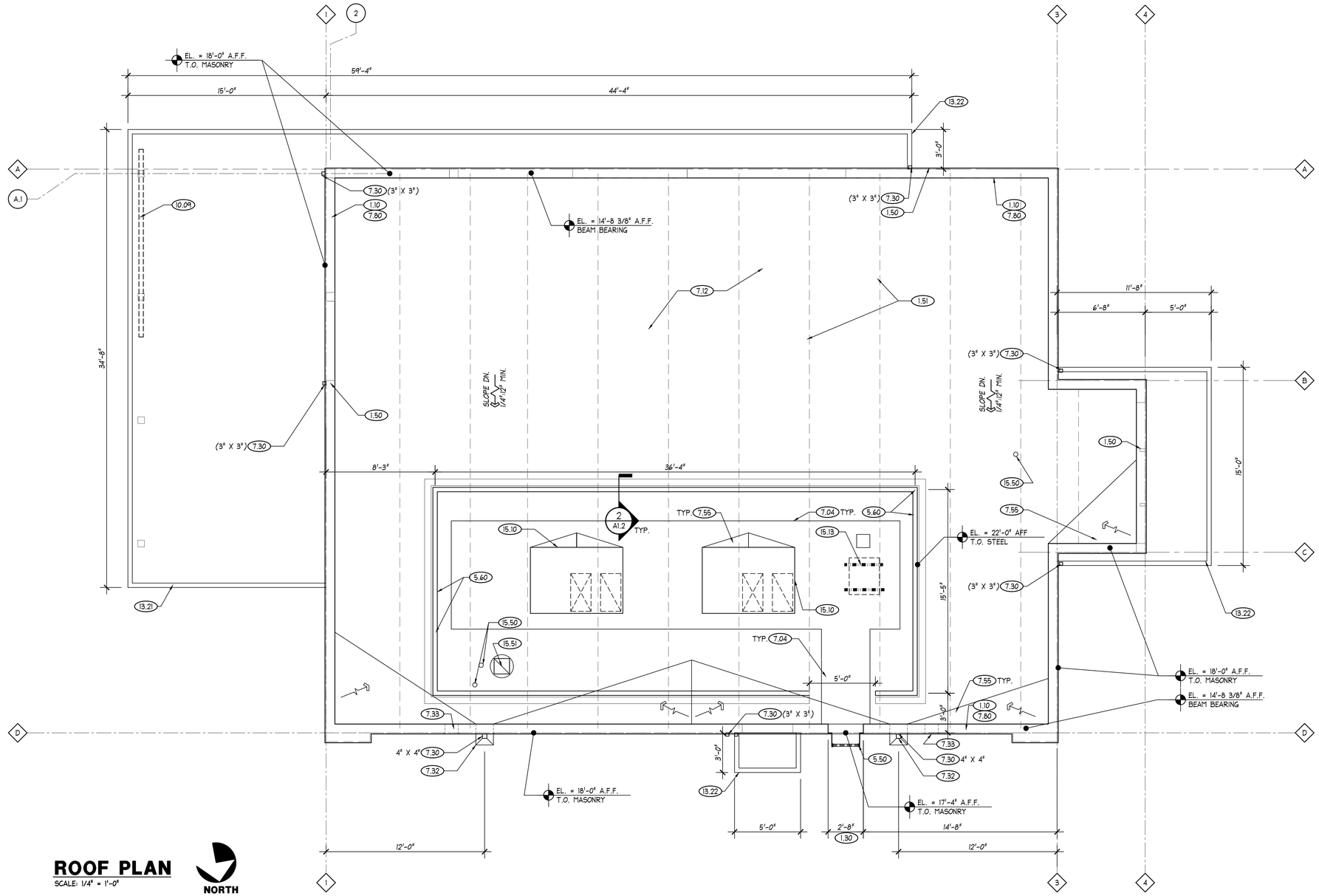

ROOF PLAN

SCALE: 1/4" = 1'-0"

NORTH

PRIMARY AND EMERGENCY ROOF DRAIN CALCULATIONS

FPC- PLUMBING
APPENDIX B - RATES OF RAINFALL - CITY OF TAMPA, FL: 4.5 INCHES

MAIN ROOF: FPC - PLUMBING TABLE 1106.3 - SIZE OF RECTANGULAR VERTICAL CONDUCTORS AND LEADERS: 3 1/2" X 4" DOWNSPOUT WILL PERMIT DRAINAGE OF 192 GPM OF RAINFALL

(2) 4" X 4" DOWNSPOUTS EACH WITH EMERGENCY OVERFLOW SCUPPER SERVING (2) ZONE AREAS AS DESCRIBED BELOW:

ZONE 1: 1,116 SQ. FT. X 4.5"/HR = 52 GPM
ZONE 2: 1,194 SQ. FT. X 4.5"/HR = 56 GPM

THE STATED VERTICAL CONDUCTORS AND ROOF DRAINS ARE ALL WITHIN ALLOWABLE LIMITS FOR AREA SERVED BASED ON RAINFALL RATES FOR THIS REGION

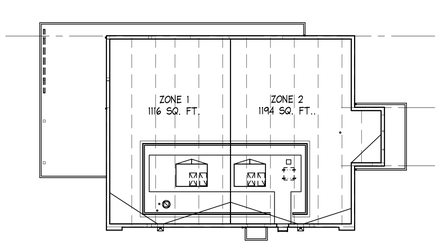

GENERAL NOTES

REFER TO SHEET A0.3 FOR THE KEYNOTES REFERENCED THROUGHOUT THE CONSTRUCTION DRAWINGS

TO THE FULLEST EXTENT POSSIBLE, BUILDING COMPONENTS WILL BE MARKED AS 'TYPICAL' (TYP.). WHERE SO, KEYED NOTES WILL NOT BE DUPLICATED FOR COMPONENTS OF LIKE KIND. SHOULD THE CONTRACTOR REQUIRE CLARIFICATION OF ANY SUCH COMPONENT, A REQUEST FOR INFORMATION (RFI) SHALL BE SUBMITTED TO THE ARCHITECT PRIOR TO BID.

ALL DOWNSPOUTS EXTENDING TO GRADE SHALL BE CONNECTED TO THE UNDERGROUND STORM SEWER UNLESS OTHERWISE NOTED. REFER TO CIVIL DRAWINGS. A CAST IRON TRANSITION BOOT WITH CLEAN OUT SHALL BE PROVIDED FOR THIS CONNECTION. REFER TO DETAIL ON SHEET A5.1

THE GENERAL CONTRACTOR SHALL CLOSELY COORDINATE LOCATIONS OF UNDERGROUND PIPING TO PRECISELY ALIGN WITH ROOF SCUPPERS AND DOWNSPOUTS

REFER TO WALL SECTIONS FOR DESCRIPTION OF CANOPIES AND AWNINGS AND REFERENCES TO DETAILS

REFER WALL SECTIONS FOR REFERENCES TO PARAPET AND ROOF DETAILS. SEE STRUCTURAL DRAWINGS FOR JOIST REQUIREMENTS

FWH Architects
3336 Grand Blvd. Suite 201
Holiday, Florida 34690
Ph. 727. 815. 3336
Fax 727. 815. 3337

TO THE BEST OF THE KNOWLEDGE OF THE ARCHITECTS AND ENGINEERS, PLANS AND SPECIFICATIONS COMPLY WITH THE APPLICABLE MINIMUM BUILDING CODES AND THE APPLICABLE MINIMUM FIRE SAFETY STANDARDS

GUY F. FABER
FL License No. AR0015323

no.	date	revision descriptions

STARBUCKS
SHELL CONSTRUCTION
1990 STATE ROAD 19
TAVARES, FL

03.25.2024
date

24007
comm. no.

ROOF PLAN

A1.1

REFER TO SHEET A0.3 FOR THE KEYNOTES REFERENCED THROUGHOUT THE CONSTRUCTION DRAWINGS

TO THE FULLEST EXTENT POSSIBLE, BUILDING COMPONENTS WILL BE MARKED AS 'TYPICAL' (TYP.). WHERE SO, KEYED NOTES WILL NOT BE DUPLICATED FOR COMPONENTS OF LIKE KIND. SHOULD THE CONTRACTOR REQUIRE CLARIFICATION OF ANY SUCH COMPONENT, A REQUEST FOR INFORMATION (RFI) SHALL BE SUBMITTED TO THE ARCHITECT PRIOR TO BID.

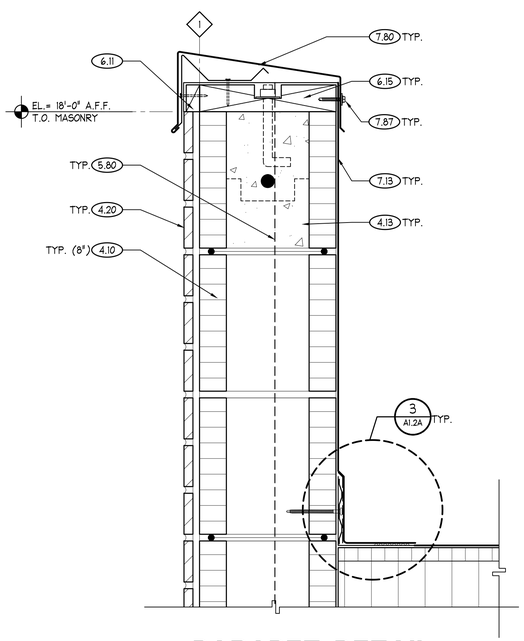

1 PARAPET DETAIL
SCALE: 3" = 1'-0"

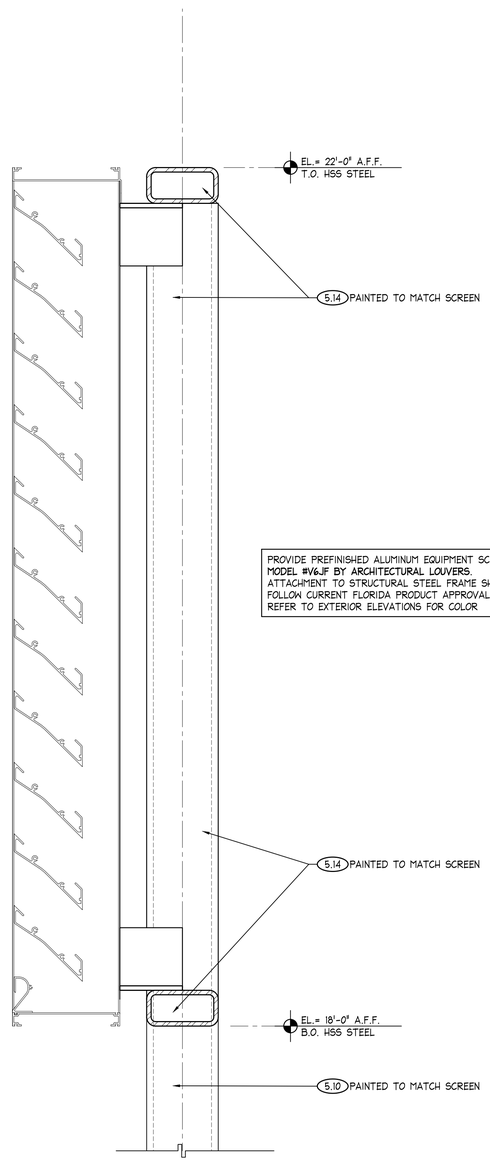

2 EQUIPMENT SCREEN DETAIL
SCALE: 3" = 1'-0"

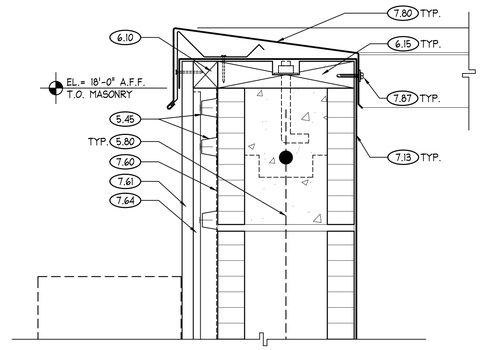

4 PARAPET DETAIL
SCALE: 3" = 1'-0"

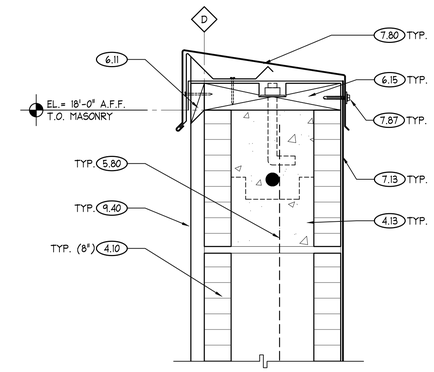

5 PARAPET DETAIL
SCALE: 3" = 1'-0"

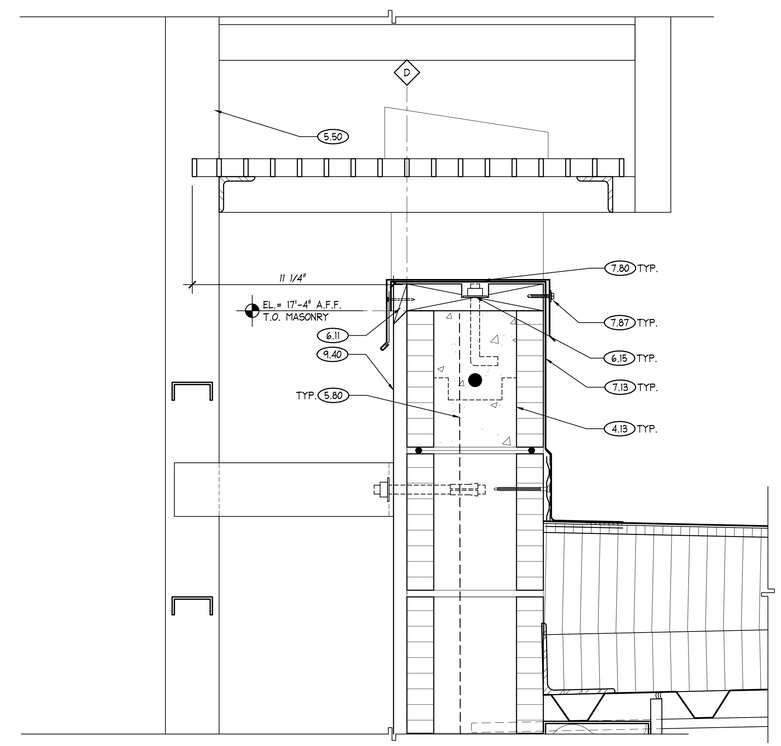

3 PARAPET DETAIL
SCALE: 3" = 1'-0"

FWH Architects
3336 Grand Blvd. Suite 201
Holiday, Florida 34690
Ph. 727. 815. 3336
Fax 727. 815. 3337

TO THE BEST OF THE KNOWLEDGE OF THE ARCHITECTS AND ENGINEERS, PLANS AND SPECIFICATIONS COMPLY WITH THE APPLICABLE MINIMUM BUILDING CODES AND THE APPLICABLE MINIMUM FIRE SAFETY STANDARDS

GUY F. FABER
FL License No. AR0015323

no.	date	revision descriptions

STARBUCKS
SHELL CONSTRUCTION
1990 STATE ROAD 19
TAVARES, FL

03.25.2024
date

24007
comm. no.

ROOF DETAILS

A1.2

REFER TO SHEET A0.3 FOR THE KEYNOTES REFERENCED THROUGHOUT THE CONSTRUCTION DRAWINGS

TO THE FULLEST EXTENT POSSIBLE, BUILDING COMPONENTS WILL BE MARKED AS 'TYPICAL' (TYP.). WHERE SO, KEYED NOTES WILL NOT BE DUPLICATED FOR COMPONENTS OF LIKE KIND. SHOULD THE CONTRACTOR REQUIRE CLARIFICATION OF ANY SUCH COMPONENT, A REQUEST FOR INFORMATION (RFI) SHALL BE SUBMITTED TO THE ARCHITECT PRIOR TO BID.

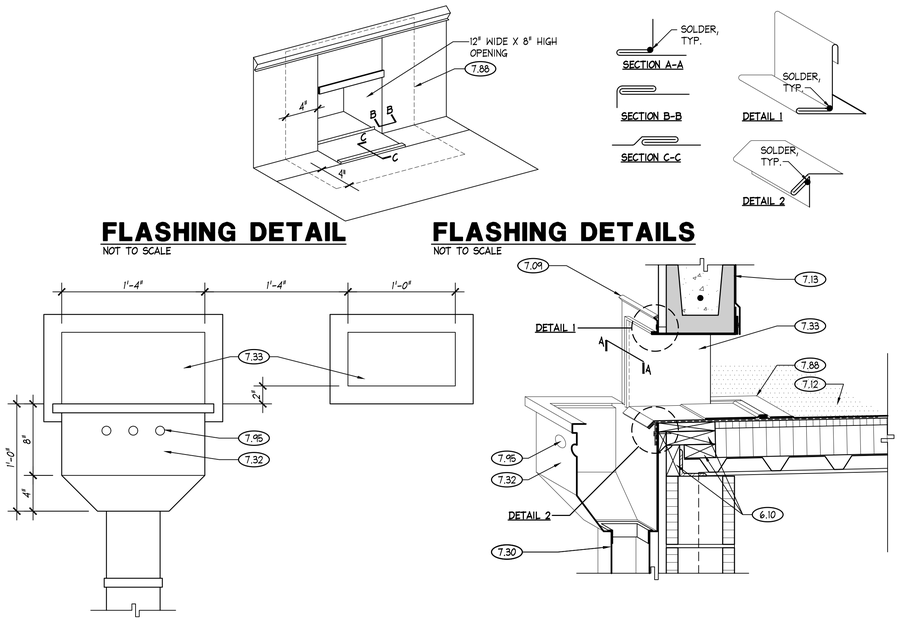

FLASHING DETAIL
NOT TO SCALE

FLASHING DETAILS
NOT TO SCALE

ELEVATION

SECTION

1 TYPICAL SCUPPER DETAILS
SCALE: 1-1/2" = 1'-0"

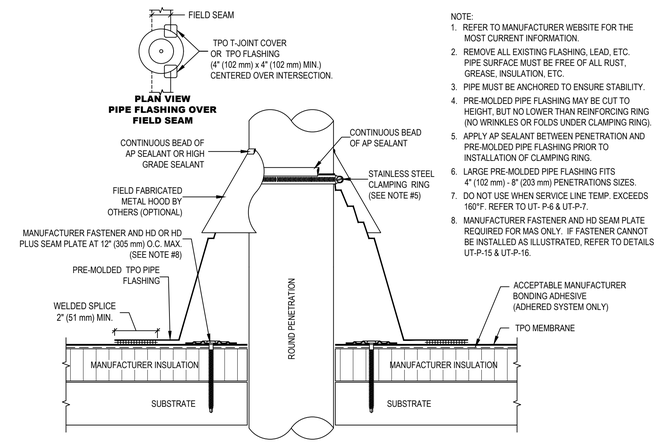

NOTE:
1. REFER TO MANUFACTURER WEBSITE FOR THE MOST CURRENT INFORMATION.
2. REMOVE ALL EXISTING FLASHING, LEAD, ETC. PIPE SURFACE MUST BE FREE OF ALL RUST, GREASE, INSULATION, ETC.
3. PIPE MUST BE ANCHORED TO ENSURE STABILITY.
4. PRE-MOLDED PIPE FLASHING MAY BE CUT TO HEIGHT, BUT NO LOWER THAN REINFORCING RING (NO WRINKLES OR FOLDS UNDER CLAMPING RING).
5. APPLY AP SEALANT BETWEEN PENETRATION AND PRE-MOLDED PIPE FLASHING PRIOR TO INSTALLATION OF CLAMPING RING.
6. LARGE PRE-MOLDED PIPE FLASHING FITS 4" (102 mm) - 8" (203 mm) PENETRATIONS SIZES.
7. DO NOT USE WHEN SERVICE LINE TEMP. EXCEEDS 160°F. REFER TO UT- P-6 & UT-P-7.
8. MANUFACTURER FASTENER AND HD SEAM PLATE REQUIRED FOR MAS ONLY. IF FASTENER CANNOT BE INSTALLED AS ILLUSTRATED, REFER TO DETAILS UT-P-15 & UT-P-16.

2 PLUMBING VENT DETAIL
SCALE: 6" = 1'-0"

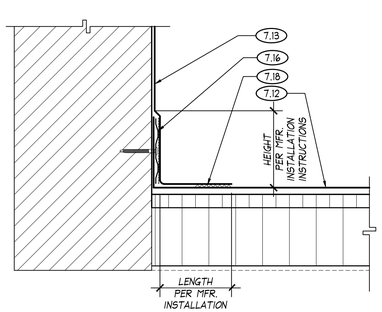

3 TYPICAL PARAPET FLASHING DETAIL
SCALE: 3" = 1'-0"

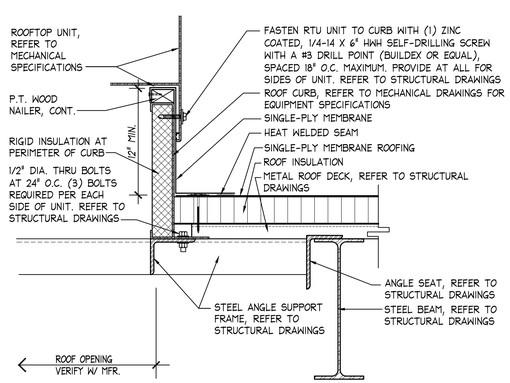

NOTES:
AT LEAST ONE SIDE OF THE ROOF OPENING SHALL BE SUPPORTED BY A ROOF FRAMING MEMBER

THE ROOF CURBS MAY BE WITHOUT INSULATION. TOP OF ROOF CURB SHALL BE INSTALLED LEVEL, SHIMMED FROM BENEATH SO TOP OF CURB HEIGHT WILL BE AS STATED IN FBC-BUILDING TABLE 1522.3 ABOVE ROOF SURFACE.

NOTE:
REFER TO STRUCTURAL ROOF FRAMING PLAN FOR ASSOCIATED STRUCTURAL DETAILS

NOTE:
REFER TO STRUCTURAL DRAWINGS FOR FASTENING METHODS AND SPECIFICATIONS

4 TYPICAL ROOFTOP UNIT CURB DETAIL
SCALE: 3/4" = 1'-0"

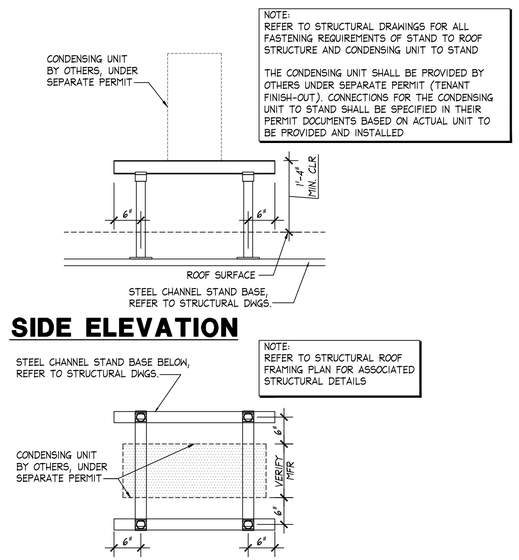

NOTE:
REFER TO STRUCTURAL DRAWINGS FOR ALL FASTENING REQUIREMENTS OF STAND TO ROOF STRUCTURE AND CONDENSING UNIT TO STAND

THE CONDENSING UNIT SHALL BE PROVIDED BY OTHERS UNDER SEPARATE PERMIT (TENANT FINISH-OUT). CONNECTIONS FOR THE CONDENSING UNIT TO STAND SHALL BE SPECIFIED IN THEIR PERMIT DOCUMENTS BASED ON ACTUAL UNIT TO BE PROVIDED AND INSTALLED

NOTE:
REFER TO STRUCTURAL ROOF FRAMING PLAN FOR ASSOCIATED STRUCTURAL DETAILS

SIDE ELEVATION

PLAN VIEW

5 CONDENSING RACK DETAILS
SCALE: 1-1/2" = 1'-0"

FWH Architects
3336 Grand Blvd. Suite 201
Holiday, Florida 34690
Ph. 727. 815. 3336
Fax 727. 815. 3337

TO THE BEST OF THE KNOWLEDGE OF THE ARCHITECTS AND ENGINEERS, PLANS AND SPECIFICATIONS COMPLY WITH THE APPLICABLE MINIMUM BUILDING CODES AND THE APPLICABLE MINIMUM FIRE SAFETY STANDARDS

GUY F. FABER
FL License No. AR0015323

no.	date	revision descriptions

STARBUCKS
SHELL CONSTRUCTION
1990 STATE ROAD 19
TAVARES, FL

03.25.2024
date

24007
comm. no.

ROOF DETAILS

A1.2A

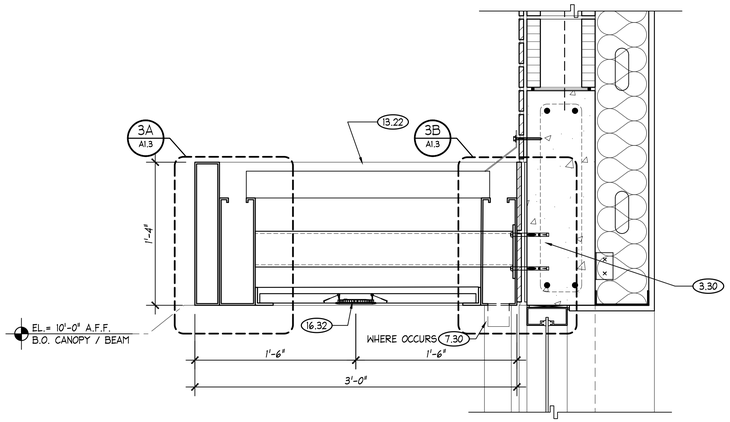

1 CANOPY SECTION
SCALE: 1-1/2" = 1'-0"

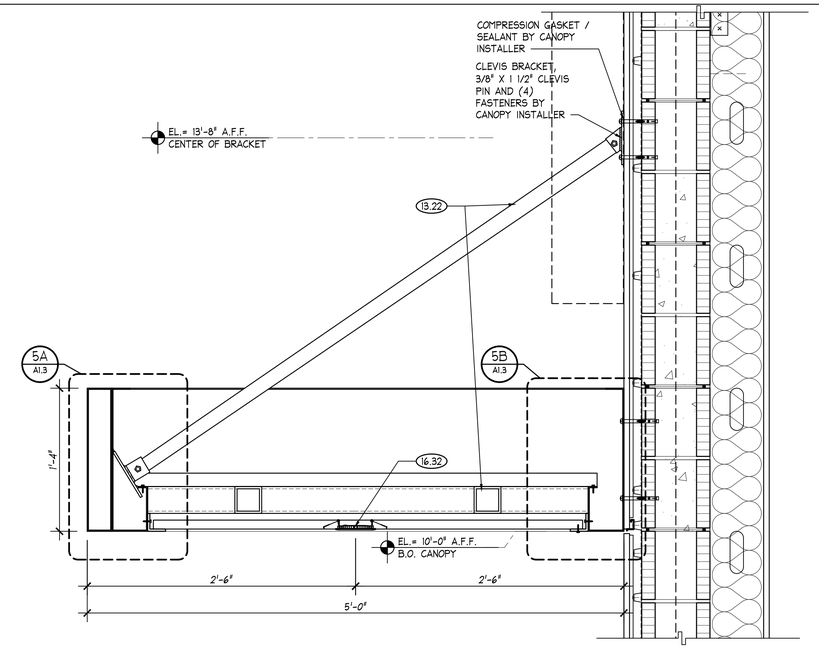

4 CANOPY SECTION
SCALE: 1-1/2" = 1'-0"

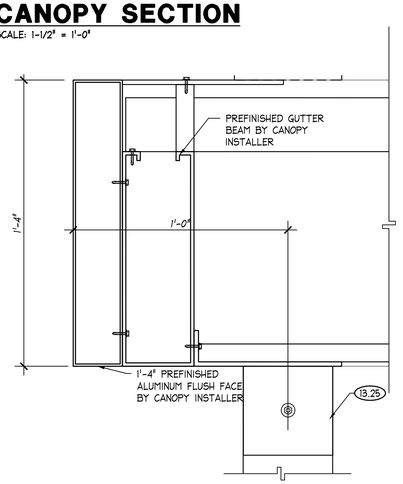

2A CANOPY DETAIL
SCALE: 3" = 1'-0"

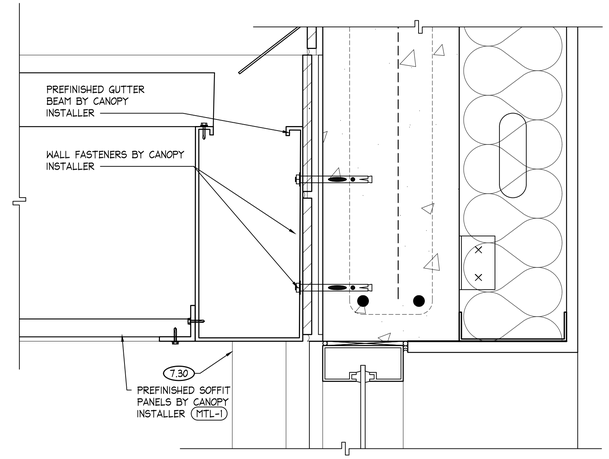

2B CANOPY DETAIL
SCALE: 3" = 1'-0"

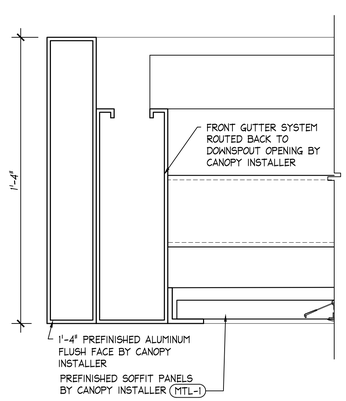

3A CANOPY DETAIL
SCALE: 3" = 1'-0"

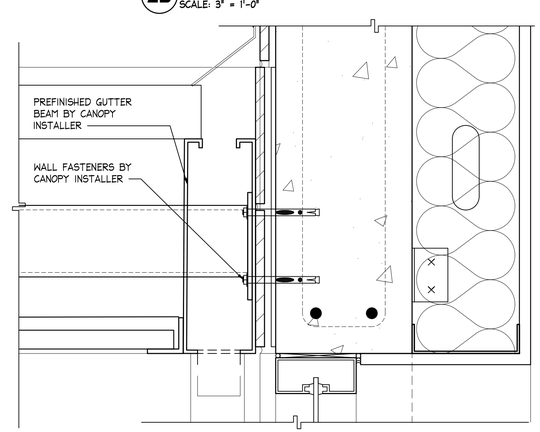

3B CANOPY DETAIL
SCALE: 3" = 1'-0"

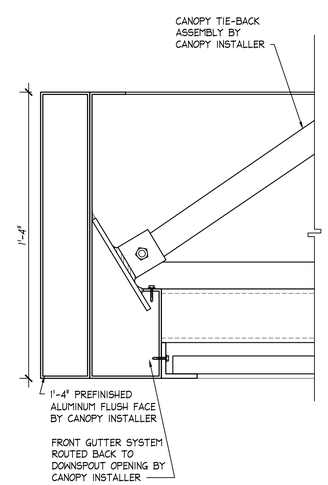

5A CANOPY DETAIL
SCALE: 3" = 1'-0"

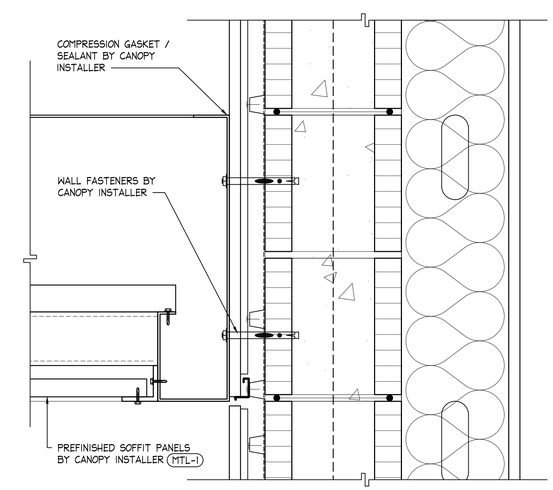

5B CANOPY DETAIL
SCALE: 3" = 1'-0"

REFER TO SHEET A0.3 FOR THE KEYNOTES REFERENCED THROUGHOUT THE CONSTRUCTION DRAWINGS

TO THE FULLEST EXTENT POSSIBLE, BUILDING COMPONENTS WILL BE MARKED AS 'TYPICAL' (TYP.). WHERE SO, KEYED NOTES WILL NOT BE DUPLICATED FOR COMPONENTS OF LIKE KIND. SHOULD THE CONTRACTOR REQUIRE CLARIFICATION OF ANY SUCH COMPONENT, A REQUEST FOR INFORMATION (RFI) SHALL BE SUBMITTED TO THE ARCHITECT PRIOR TO BID.

PRE-ENGINEERED CANOPY NOTES

THE GENERAL CONTRACTOR SHALL ENGAGE A CANOPY MANUFACTURER TO PROVIDE FULLY ENGINEERED CANOPIES IN COMPLIANCE WITH THE DESIGN INTENT PROVIDED IN THE CONSTRUCTION DOCUMENTS

THE CANOPY MANUFACTURER SHALL PROVIDE CANOPY ASSEMBLIES THAT ARE DESIGNED TO MEET THE WIND LOADS AT THE SUBJECT PROPERTY AND, ADDITIONALLY, THAT ARE TESTED AND APPROVED BY MIAMI-DADE NOA OR FLORIDA PRODUCT APPROVAL

THE CANOPY MANUFACTURER SHALL PROVIDE FULLY ENGINEERED SHOP DRAWINGS WHICH SPECIFY ALL CANOPY COMPONENTS INCLUDING CONNECTIONS TO PRIMARY STRUCTURE. THE CONNECTION TO PRIMARY STRUCTURE INCLUDES ANY AND ALL NECESSARY SUPPORT BLOCKING REQUIREMENTS AND METHOD OF ATTACHMENT TO PRIMARY STRUCTURE. SHOP DRAWINGS SHALL BE SUBMITTED TO THE GENERAL CONTRACTOR FOR REVIEW AND APPROVAL

UPON RECEIPT OF SHOP DRAWING APPROVAL, THE CANOPY MANUFACTURER SHALL BE RESPONSIBLE FOR SUBMISSION OF SIGNED AND SEALED PLANS FOR PERMIT TO THE AUTHORITY HAVING JURISDICTION

UPON APPROVAL BY THE JURISDICTION, THE CANOPY MANUFACTURER SHALL BE RESPONSIBLE FOR THE FABRICATION AND COMPLETE INSTALLATION OF THE CANOPIES

ALL SUPPORT BLOCKING AND ATTACHMENT TO THE BUILDING SHALL BE FULLY COORDINATED WITH THE GENERAL CONTRACTOR

REFER TO ENLARGED DETAILS ON THIS SHEET FOR DESIGN INTENT AND PHYSICAL CANOPY PARAMETERS. A WRITTEN DESCRIPTION IS AS FOLLOWS:

1) THE CANOPIES SHALL BE PRE-ENGINEERED, PRE-FINISHED ALUMINUM
2) CANOPIES AT THE PRIMARY FACADE(S) AND REAR SERVICE DOOR SHALL HAVE INTEGRATED GUTTERS AS SHOWN ROUTED WITH OUTLETS PROVIDED BY THE CANOPY INSTALLER (THE DOWNSPOUTS SHALL BE PROVIDED AND INSTALLED BY THE GENERAL CONTRACTOR. WHERE APPLICABLE, THE DOWNSPOUTS SHALL BE CONNECTED TO THE UNDERGROUND STORM SYSTEM. DOWNSPOUTS SHALL BE PRE-FINISHED ALUMINUM TO MATCH THE CANOPY COMPONENTS)
3) THE CANOPY AT THE DRIVE-THRU SHALL HAVE INTEGRATED FRONT GUTTERS ROUTED TO OUTLETS AT THE MAIN BUILDING WALL (THE DOWNSPOUTS SHALL BE PROVIDED AND INSTALLED BY THE GENERAL CONTRACTOR. WHERE APPLICABLE, THE DOWNSPOUTS SHALL BE CONNECTED TO THE UNDERGROUND STORM SYSTEM. DOWNSPOUTS SHALL BE PRE-FINISHED ALUMINUM TO MATCH THE CANOPY COMPONENTS)
4) THE CANOPY SOFFIT MATERIAL SHALL BE PRE-FINISHED ALUMINUM ONLY, COLOR AS INDICATED ON THIS SHEET
5) CANOPIES SHALL INCLUDE RECESSED DOWN LIGHTING AS INDICATED ON THE REFLECTED CEILING PLAN AND ELECTRICAL DRAWINGS
6) WIRING FOR RECESS MOUNTED LIGHTING, EMERGENCY LIGHTING, ETC. AT THE UNDERSIDE OF CANOPIES SHALL BE FULLY CONCEALED WITHIN SOFFIT. THE ELECTRICIAN SHALL PROVIDE DETAILS SHOWING ROUTING OF WIRING FOR APPROVAL PRIOR TO INSTALLATION
7) ALUMINUM COMPONENTS TO BE FINISHED WITH STANDARD, OVEN CURED POWDER COAT AND SHALL MEET AAMA 2604 REQUIREMENTS
8) ANY GALVANIZED STEEL COMPONENTS SHALL BE PRIMED AND PAINTED
9) ALUMINUM AND GALVANIZED STEEL COMPONENTS SHALL BE ISOLATED FROM ONE ANOTHER TO PREVENT GALVANIC ACTION

REFER TO THE FINISH SCHEDULE ON SHEET A3.0 FOR CANOPY FINISH COLOR

FWH Architects
3336 Grand Blvd. Suite 201
Holiday, Florida 34690
Ph. 727. 815. 3336
Fax 727. 815. 3337

TO THE BEST OF THE KNOWLEDGE OF THE ARCHITECTS AND ENGINEERS, PLANS AND SPECIFICATIONS COMPLY WITH THE APPLICABLE MINIMUM BUILDING CODES AND THE APPLICABLE MINIMUM FIRE SAFETY STANDARDS

GUY F. FABER
FL License No. AR0015323

no.	date	revision descriptions

STARBUCKS
SHELL CONSTRUCTION
1990 STATE ROAD 19
TAVARES, FL

03.25.2024
date

24007
comm. no.

CANOPY DETAILS

A1.3

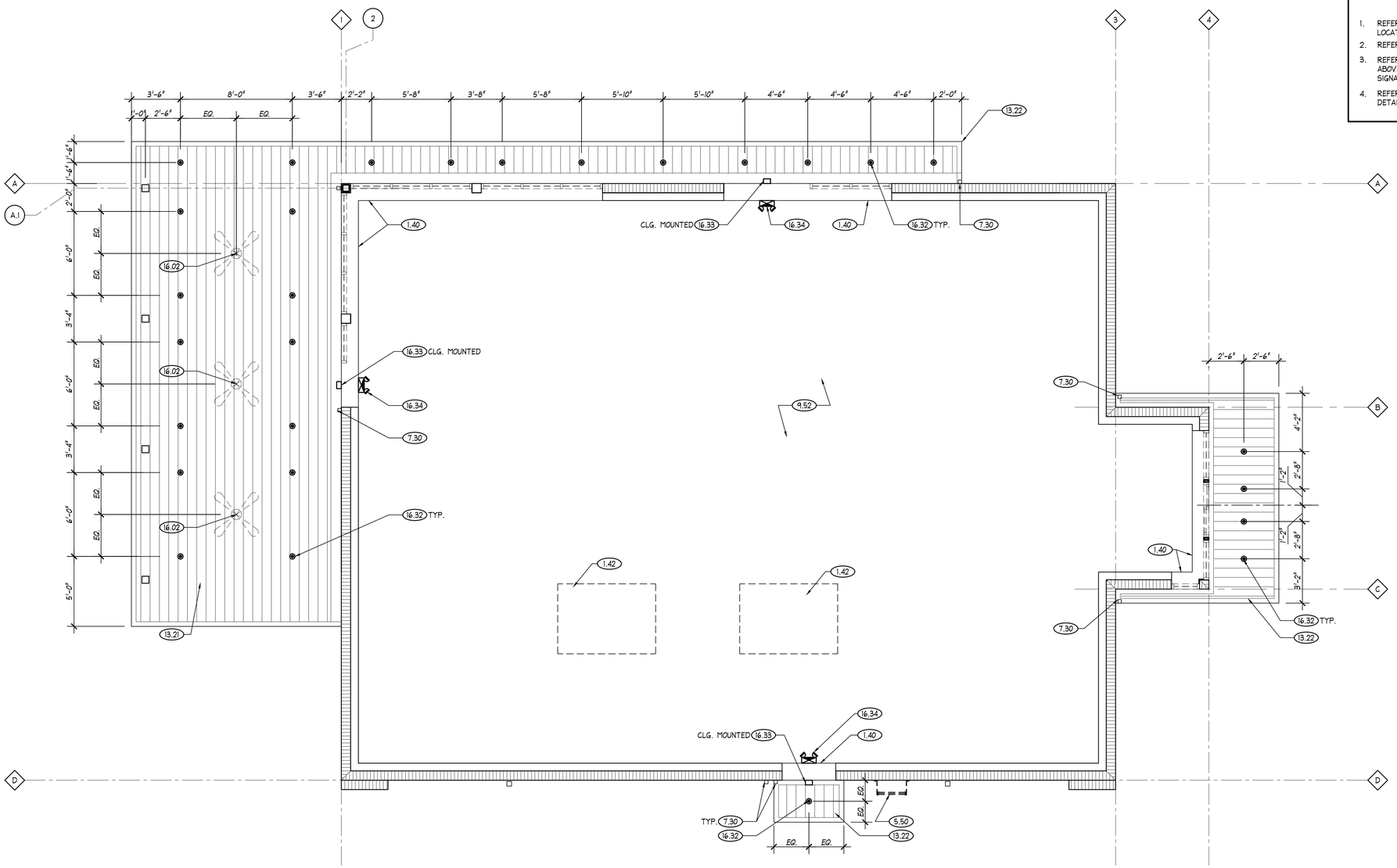

REFLECTED CEILING PLAN

SCALE: 1/4" = 1'-0"

NORTH

GENERAL NOTES

REFER TO SHEET A0.3 FOR THE KEYNOTES REFERENCED THROUGHOUT THE CONSTRUCTION DRAWINGS

TO THE FULLEST EXTENT POSSIBLE, BUILDING COMPONENTS WILL BE MARKED AS 'TYPICAL' (TYP.). WHERE SO, KEYED NOTES WILL NOT BE DUPLICATED FOR COMPONENTS OF LIKE KIND. SHOULD THE CONTRACTOR REQUIRE CLARIFICATION OF ANY SUCH COMPONENT, A REQUEST FOR INFORMATION (RFI) SHALL BE SUBMITTED TO THE ARCHITECT PRIOR TO BID.

1. REFER TO ELECTRICAL DRAWINGS FOR ALL LIGHTING SPECIFICATIONS AND LOCATIONS OF EMERGENCY LIGHTING
2. REFER TO MECHANICAL PLANS FOR ROOFTOP EQUIPMENT AND DROPS
3. REFER TO ELECTRICAL DRAWINGS FOR ELECTRIC POWER SUPPLY / RECEPTACLES ABOVE STOREFRONT OPENINGS AND THE BUILDING EXTERIOR FOR WALL MOUNTED SIGNAGE. REFER ALSO TO THE EXTERIOR ELEVATIONS
4. REFER TO SHEET A4.1 FOR HEAD, JAMB AND SILL DETAILS

REFLECTED CEILING LEGEND

SYMBOL	DESCRIPTION	REMARKS
	RECESS MOUNTED EXTERIOR DOWN LIGHT FIXTURE	REFER TO ELECTRICAL DRAWINGS FOR LIGHTING SPECIFICATIONS
	EMERGENCY/EXIT LIGHT COMBINATION FIXTURE	REFER TO ELECTRICAL DRAWINGS FOR LIGHTING SPECIFICATIONS AND LOCATIONS
	EXTERIOR EMERGENCY LIGHT FIXTURE, WALL OR CEILING MOUNTED	REFER TO ELECTRICAL DRAWINGS FOR LIGHTING SPECIFICATIONS. SEE ALSO EXTERIOR ELEVATIONS
	FUTURE CEILING FAN TO BE PROVIDED AND INSTALLED BY TENANT	REFER TO ELECTRICAL DRAWINGS FOR JUNCTION BOX REQUIREMENTS

FWH Architects

3336 Grand Blvd. Suite 201
Holiday, Florida 34690
Ph. 727. 815. 3336
Fax 727. 815. 3337

TO THE BEST OF THE KNOWLEDGE OF THE ARCHITECTS AND ENGINEERS, PLANS AND SPECIFICATIONS COMPLY WITH THE APPLICABLE MINIMUM BUILDING CODES AND THE APPLICABLE MINIMUM FIRE SAFETY STANDARDS

GUY F. FABER
FL License No. AR0015323

no.	date	revision descriptions

STARBUCKS
SHELL CONSTRUCTION
1990 STATE ROAD 19
TAVARES, FL

03.25.2024
date

24007
comm. no.

REFLECTED CEILING PLAN

A2.0

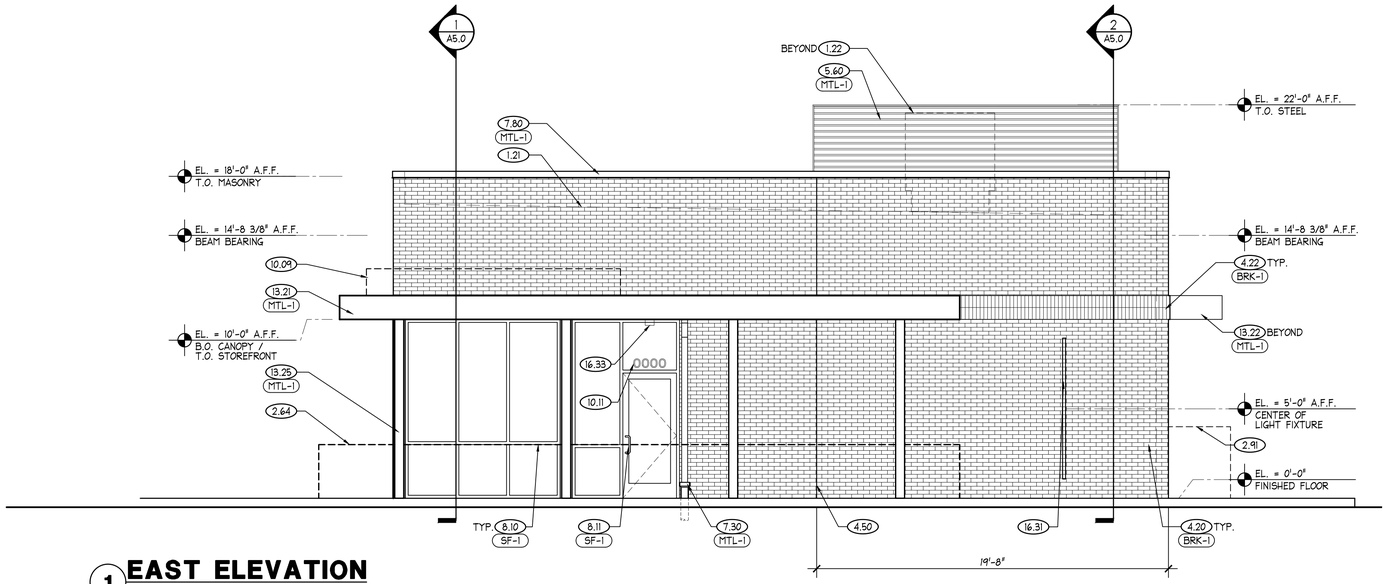

1 EAST ELEVATION

SCALE: 1/4" = 1'-0"

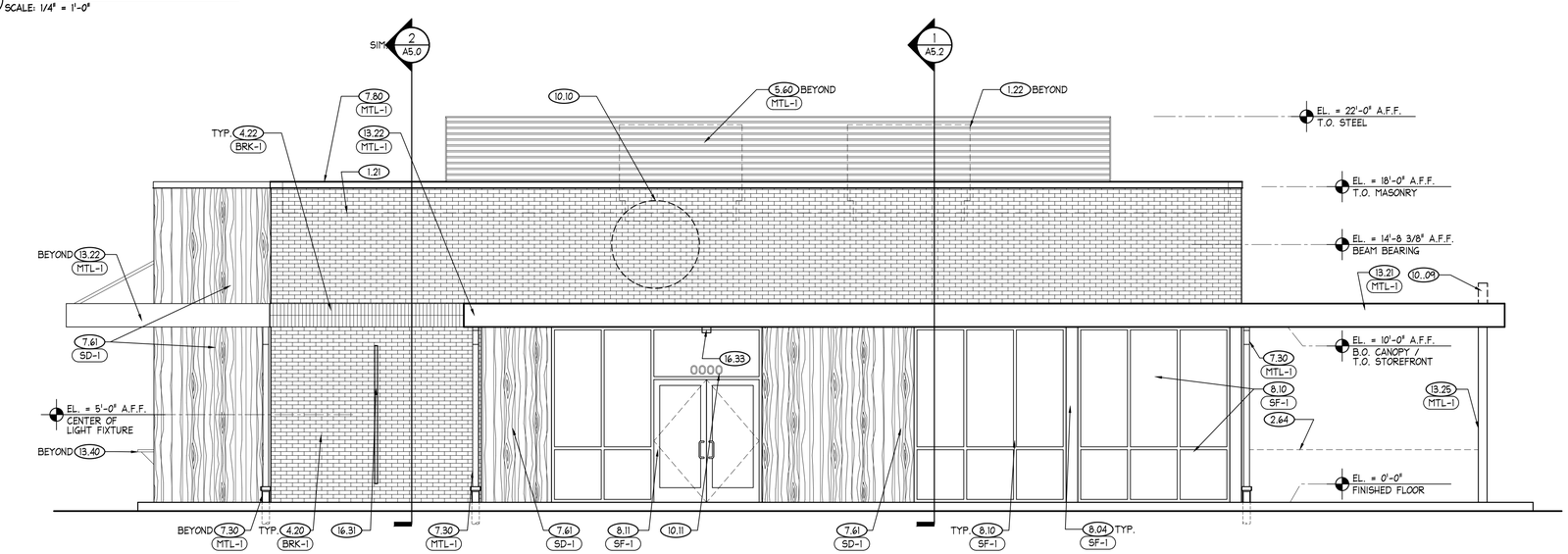

2 SOUTH ELEVATION

SCALE: 1/4" = 1'-0"

GENERAL NOTES

REFER TO SHEET A0.3 FOR THE KEYNOTES REFERENCED THROUGHOUT THE CONSTRUCTION DRAWINGS

TO THE FULLEST EXTENT POSSIBLE, BUILDING COMPONENTS WILL BE MARKED AS 'TYPICAL' (TYP.). WHERE SO, KEYED NOTES WILL NOT BE DUPLICATED FOR COMPONENTS OF LIKE KIND. SHOULD THE CONTRACTOR REQUIRE CLARIFICATION OF ANY SUCH COMPONENT, A REQUEST FOR INFORMATION (RFI) SHALL BE SUBMITTED TO THE ARCHITECT PRIOR TO BID.

SIGNAGE DEPICTED IN THESE DOCUMENTS ARE FOR COORDINATION PURPOSES ONLY. REFER TO ELECTRICAL DRAWINGS WHERE APPLICABLE

IT SHALL BE UNDERSTOOD THAT ALL EXTERIOR BUILDING MOUNTED AND SITE SIGNAGE WILL BE PERMITTED SEPARATELY BY THE SIGN VENDOR. AT THAT TIME, COMPLETE DETAILS INCLUDING, BUT NOT LIMITED TO, SIGN FABRICATION, SIGN INSTALLATION, SIGN AREA AND QUANTITIES, ETC. WILL BE SUBMITTED FOR PERMIT REVIEW AND APPROVAL PRIOR TO COMMENCEMENT OF WORK.

EXTERIOR FINISH NOTES

EXTERIOR INSULATION FINISH SYSTEM (EIFS) REQUIREMENTS:

1. THE STANDARD FINISH COAT OVER CEMENT PLASTER SURFACES SHALL BE AN ACRYLIC EIFS FINISH COAT, "DRYVIT TAFTS" (OPTION 1) AS MANUFACTURED BY DRYVIT SYSTEMS, INC. COLORS, AS SPECIFIED ON THE EXTERIOR FINISH SCHEDULE, HAVE BEEN SELECTED FROM DRYVIT'S STANDARD COLORS. THIS SYSTEM CONSISTS OF A TINTED PRIMER AND TEXTURED ACRYLIC FINISH WITH INTEGRAL COLOR. THE SPECIFIED SYSTEM HAS A 10-YEAR MANUFACTURER WARRANTY

2. WHERE A CUSTOM COLOR IS REQUIRED FOR THE FINISH COAT OVER CEMENT PLASTER SURFACES, AN ACRYLIC EIFS FINISH COAT, "DRYVIT TAFTS" (OPTION 1) WITH STRATOTONE COLOR MATCHING SYSTEM AS MANUFACTURED BY DRYVIT SYSTEMS, INC. SHALL BE PROVIDED. CUSTOM COLORS ARE SPECIFIED ON THE EXTERIOR FINISH SCHEDULE. THIS SYSTEM CONSISTS OF A TINTED PRIMER AND TEXTURED ACRYLIC FINISH WITH INTEGRAL COLOR. THE SPECIFIED SYSTEM HAS A 5-YEAR MANUFACTURER WARRANTY

3. ALL FINISH COAT TEXTURES SHALL BE "SANDPEBBLE FINE" UNLESS OTHERWISE NOTED

4. WHERE FOAM TRIM, CORNICE MOLDING OR OTHER SHAPES ARE SPECIFIED, COMPONENTS SHALL BE AS MANUFACTURED BY "DRYVIT SHAPES BY ACROCORE" AND SHALL BE COMPRISED OF A TYPE I CLASSIFICATION EXPANDED POLYSTYRENE WRAPPED IN A FLEXIBLE IMPACT RESISTANT FIBERGLASS MESH AND COATED WITH A FACTORY APPLIED POLYMER MODIFIED, FLEXIBLE CEMENT COATING

5. ALL GENERAL CONTRACTOR BIDS SHALL INCLUDE THE ABOVE STATED SYSTEMS / PRODUCTS IN THEIR BASE BIDS. SUBSTITUTIONS WILL BE CONSIDERED FOR APPROVAL BUT ONLY IF FULLY QUALIFIED IN BIDS INCLUDING COMPLETE SYSTEM / PRODUCT SPECIFICATIONS AND ASSOCIATED COSTS

ALUMINUM COPING, DRIP EDGES, SCUPPERS AND DOWNSPOUT REQUIREMENTS:

1. ALL COMPONENTS SHALL BE PREFINISHED WITH A FACTORY APPLIED, KYNAR 500 FINISH OR MANUFACTURER EQUIVALENT. COLORS SHALL BE AS SPECIFIED FROM THE MANUFACTURER'S STANDARD COLOR OPTIONS

GENERAL:

1. WHERE PLASTER REVEALS ARE NOT PREFINISHED, REVEALS SHALL BE PAINTED TO MATCH THE ADJACENT WALL COLOR UNLESS OTHERWISE NOTED

2. ALL EXPOSED, BUILDING MOUNTED UTILITIES AND CONDUITS SHALL BE PAINTED TO MATCH THE ADJACENT WALL SURFACES UNLESS OTHERWISE NOTED

EXTERIOR FINISH SCHEDULE

CEMENT PLASTER / EIFS FINISHES (ACRYLIC EIFS FINISH WITH INTEGRAL COLOR AND TEXTURE)

TAG	MANUFACTURER	COLOR	DESCRIPTION
EF-1	DRYVIT	MATCH SHERWIN WILLIAMS #SW7015 "REPOSE GRAY"	CUSTOM DRYVIT STRATOTONE COLOR

BRICK

TAG	MANUFACTURER	COLOR	DESCRIPTION
BRK-1	VEE BRICK CLASSICS	COLOR: "710 SEASHELL" MORTAR: SM330 "BURLYWOOD"	

SIDING

TAG	MANUFACTURER	COLOR	DESCRIPTION
SD-1	NICHIHA	VINTAGE WOOD "CEDAR"	CEMENTITOUS SIDING

PAINT FINISHES

TAG	MANUFACTURER	COLOR	DESCRIPTION
PT-1	SHERWIN WILLIAMS	SW#7015 "REPOSE GRAY"	

METAL SOFFIT PANELS, TRIM, COPING, DOWNSPOUTS AND SCUPPERS

MTL-1	PAC-CLAD	"MATTE BLACK"	KYNAR 500

ALUMINUM STOREFRONT

SF-1	YKK	"BLACK"	

FWH Architects
3336 Grand Blvd. Suite 201
Holiday, Florida 34690
Ph. 727. 815. 3336
Fax 727. 815. 3337

TO THE BEST OF THE KNOWLEDGE OF THE ARCHITECTS AND ENGINEERS, PLANS AND SPECIFICATIONS COMPLY WITH THE APPLICABLE MINIMUM BUILDING CODES AND THE APPLICABLE MINIMUM FIRE SAFETY STANDARDS

GUY F. FABER
FL License No. AR0015323

no.	date	revision descriptions

STARBUCKS
SHELL CONSTRUCTION
1990 STATE ROAD 19
TAVARES, FL

03.25.2024
date

24007
comm. no.

EXTERIOR ELEV. AND EXTERIOR FINISH SCHEDULE

A3.0

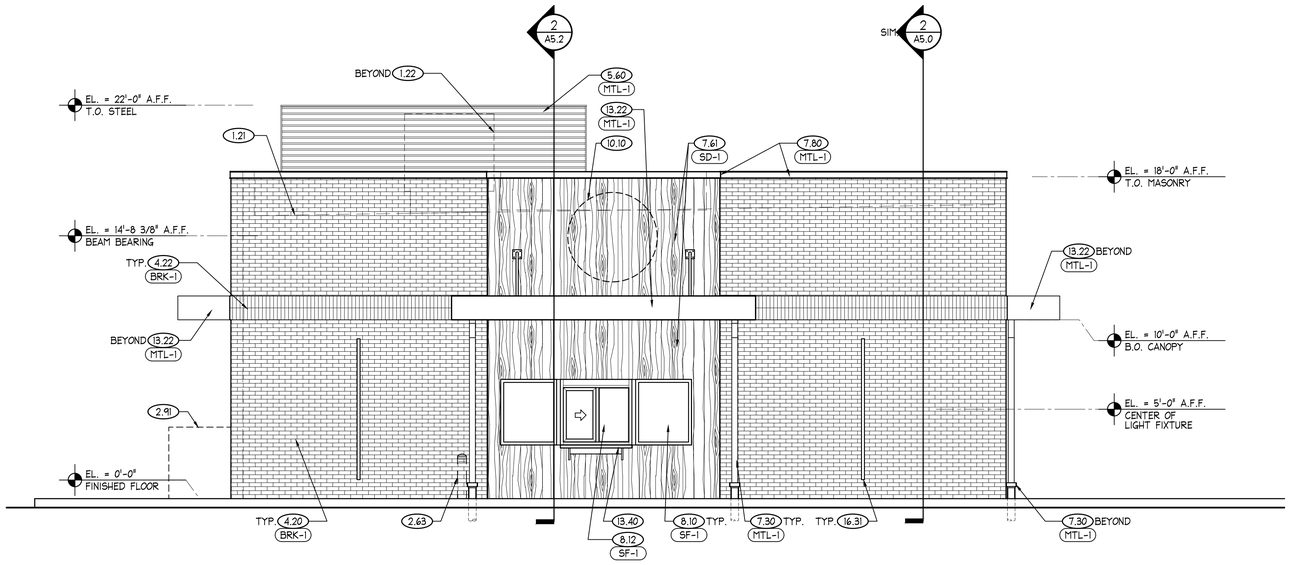

1 WEST ELEVATION

SCALE: 1/4" = 1'-0"

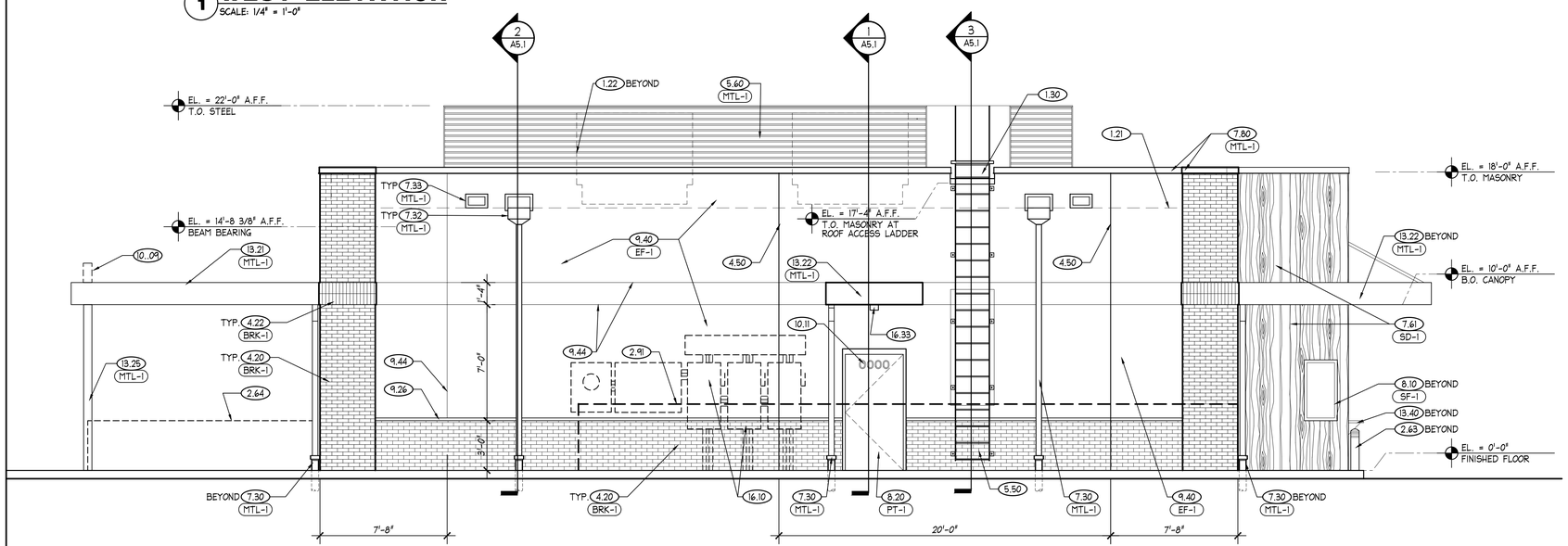

2 NORTH ELEVATION

SCALE: 1/4" = 1'-0"

GENERAL NOTES

REFER TO SHEET A0.3 FOR THE KEYNOTES REFERENCED THROUGHOUT THE CONSTRUCTION DRAWINGS

TO THE FULLEST EXTENT POSSIBLE, BUILDING COMPONENTS WILL BE MARKED AS 'TYPICAL' (TYP.). WHERE SO, KEYED NOTES WILL NOT BE DUPLICATED FOR COMPONENTS OF LIKE KIND. SHOULD THE CONTRACTOR REQUIRE CLARIFICATION OF ANY SUCH COMPONENT, A REQUEST FOR INFORMATION (RFI) SHALL BE SUBMITTED TO THE ARCHITECT PRIOR TO BID.

SIGNAGE DEPICTED IN THESE DOCUMENTS ARE FOR COORDINATION PURPOSES ONLY. REFER TO ELECTRICAL DRAWINGS WHERE APPLICABLE

IT SHALL BE UNDERSTOOD THAT ALL EXTERIOR BUILDING MOUNTED AND SITE SIGNAGE WILL BE PERMITTED SEPARATELY BY THE SIGN VENDOR. AT THAT TIME, COMPLETE DETAILS INCLUDING, BUT NOT LIMITED TO, SIGN FABRICATION, SIGN INSTALLATION, SIGN AREA AND QUANTITIES, ETC. WILL BE SUBMITTED FOR PERMIT REVIEW AND APPROVAL PRIOR TO COMMENCEMENT OF WORK

EXTERIOR FINISH NOTES

EXTERIOR INSULATION FINISH SYSTEM (EIFS) REQUIREMENTS:

1. THE STANDARD FINISH COAT OVER CEMENT PLASTER SURFACES SHALL BE AN ACRYLIC EIFS FINISH COAT, "DRYVIT TAFTS" (OPTION 1) AS MANUFACTURED BY DRYVIT SYSTEMS, INC. COLORS, AS SPECIFIED ON THE EXTERIOR FINISH SCHEDULE, HAVE BEEN SELECTED FROM DRYVIT'S STANDARD COLORS. THIS SYSTEM CONSISTS OF A TINTED PRIMER AND TEXTURED ACRYLIC FINISH WITH INTEGRAL COLOR. THE SPECIFIED SYSTEM HAS A 10-YEAR MANUFACTURER WARRANTY

2. WHERE A CUSTOM COLOR IS REQUIRED FOR THE FINISH COAT OVER CEMENT PLASTER SURFACES, AN ACRYLIC EIFS FINISH COAT, "DRYVIT TAFTS" (OPTION 1) WITH STRATOTONE COLOR MATCHING SYSTEM AS MANUFACTURED BY DRYVIT SYSTEMS, INC. SHALL BE PROVIDED. CUSTOM COLORS ARE SPECIFIED ON THE EXTERIOR FINISH SCHEDULE. THIS SYSTEM CONSISTS OF A TINTED PRIMER AND TEXTURED ACRYLIC FINISH WITH INTEGRAL COLOR. THE SPECIFIED SYSTEM HAS A 5-YEAR MANUFACTURER WARRANTY

3. ALL FINISH COAT TEXTURES SHALL BE "SANDPEBBLE FINE" UNLESS OTHERWISE NOTED

4. WHERE FOAM TRIM, CORNICE MOLDING OR OTHER SHAPES ARE SPECIFIED, COMPONENTS SHALL BE AS MANUFACTURED BY "DRYVIT SHAPES BY ACROCORE" AND SHALL BE COMPRISED OF A TYPE 1 CLASSIFICATION EXPANDED POLYSTYRENE WRAPPED IN A FLEXIBLE IMPACT RESISTANT FIBERGLASS MESH AND COATED WITH A FACTORY APPLIED POLYMER MODIFIED, FLEXIBLE CEMENT COATING

5. ALL GENERAL CONTRACTOR BIDS SHALL INCLUDE THE ABOVE STATED SYSTEMS / PRODUCTS IN THEIR BASE BIDS. SUBSTITUTIONS WILL BE CONSIDERED FOR APPROVAL BUT ONLY IF FULLY QUALIFIED IN BIDS INCLUDING COMPLETE SYSTEM / PRODUCT SPECIFICATIONS AND ASSOCIATED COSTS

ALUMINUM COPING, DRIP EDGES, SCUPPERS AND DOWNSPOUT REQUIREMENTS:

1. ALL COMPONENTS SHALL BE PREFINISHED WITH A FACTORY APPLIED, KYNAR 500 FINISH OR MANUFACTURER EQUIVALENT. COLORS SHALL BE AS SPECIFIED FROM THE MANUFACTURER'S STANDARD COLOR OPTIONS

GENERAL:

1. WHERE PLASTER REVEALS ARE NOT PREFINISHED, REVEALS SHALL BE PAINTED TO MATCH THE ADJACENT WALL COLOR UNLESS OTHERWISE NOTED

2. ALL EXPOSED, BUILDING MOUNTED UTILITIES AND CONDUITS SHALL BE PAINTED TO MATCH THE ADJACENT WALL SURFACES UNLESS OTHERWISE NOTED

EXTERIOR FINISH SCHEDULE

CEMENT PLASTER / EIFS FINISHES
(ACRYLIC EIFS FINISH WITH INTEGRAL COLOR AND TEXTURE)

TAG	MANUFACTURER	COLOR	DESCRIPTION
EF-1	DRYVIT	MATCH SHERWIN WILLIAMS #SW7015 "REPOSE GRAY"	CUSTOM DRYVIT STRATOTONE COLOR

BRICK

TAG	MANUFACTURER	COLOR	DESCRIPTION
BRK-1	VEE BRICK CLASSICS	COLOR: "710 SEASHELL" MORTAR: SM330 "BURLYWOOD"	

SIDING

TAG	MANUFACTURER	COLOR	DESCRIPTION
SD-1	NICHIHA	VINTAGE WOOD "CEDAR"	CEMENTITOUS SIDING

PAINT FINISHES

TAG	MANUFACTURER	COLOR	DESCRIPTION
PT-1	SHERWIN WILLIAMS	SW#7015 "REPOSE GRAY"	

METAL SOFFIT PANELS, TRIM, COPING, DOWNSPOUTS AND SCUPPERS

TAG	MANUFACTURER	COLOR	DESCRIPTION
MTL-1	PAC-CLAD	"MATTE BLACK"	KYNAR 500

ALUMINUM STOREFRONT

TAG	MANUFACTURER	COLOR	DESCRIPTION
SF-1	YKK	"BLACK"	

FWH Architects
3336 Grand Blvd. Suite 201
Holiday, Florida 34690
Ph. 727. 815. 3336
Fax 727. 815. 3337

TO THE BEST OF THE KNOWLEDGE OF THE ARCHITECTS AND ENGINEERS, PLANS AND SPECIFICATIONS COMPLY WITH THE APPLICABLE MINIMUM BUILDING CODES AND THE APPLICABLE MINIMUM FIRE SAFETY STANDARDS

GUY F. FABER
FL License No. AR0015323

no.	date	revision descriptions

STARBUCKS
SHELL CONSTRUCTION
1990 STATE ROAD 19
TAVARES, FL

03.25.2024
date

24007
comm. no.

EXTERIOR ELEVATIONS

A3.1

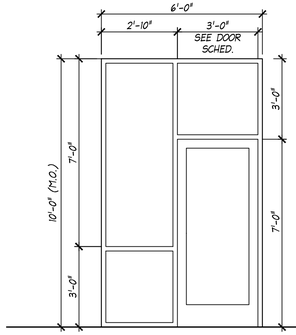

(A) FRAME TYPE "AL-1"
ALUM. STOREFRONT WINDOW

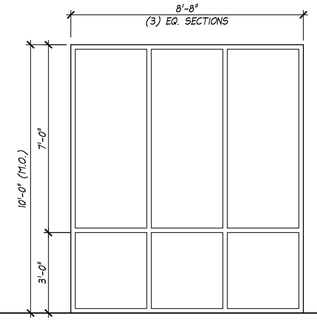

(B) FRAME TYPE "AL-2"
ALUM. STOREFRONT WINDOW

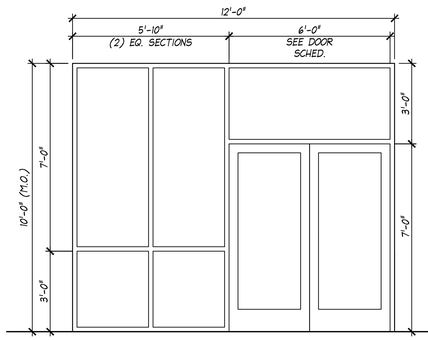

(C) FRAME TYPE "AL-3"
ALUM. STOREFRONT WINDOW

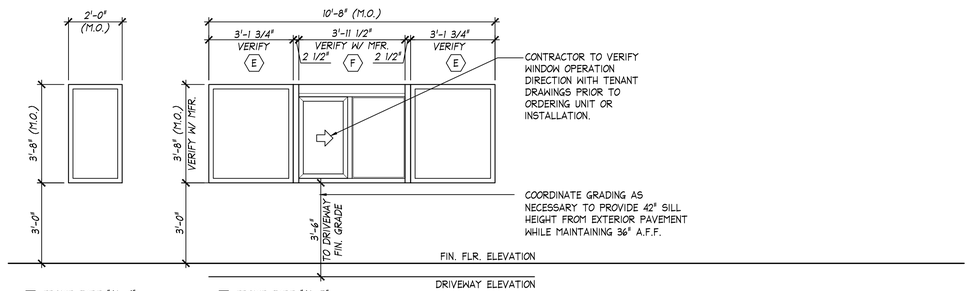

(D) FRAME TYPE "AL-4"
ALUM. STOREFRONT WINDOW

(E) FRAME TYPE "AL-5"
ALUM. STOREFRONT WINDOW

(F) FRAME TYPE "AL-6"
ALUM. DRIVE-THRU WINDOW
(REFER TO DRIVE-THRU WINDOW SPECIFICATIONS THIS SHEET)

1 ALUMINUM STOREFRONT FRAME TYPES

SCALE: 3/16" = 1'-0"

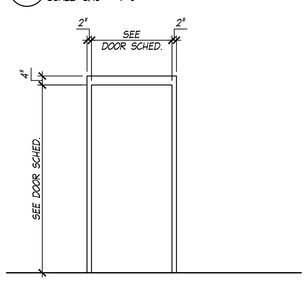

FRAME TYPE "HM-1"
EXTERIOR HOLLOW
METAL DOOR FRAME

2 HOLLOW METAL FRAME TYPES

SCALE: 3/16" = 1'-0"

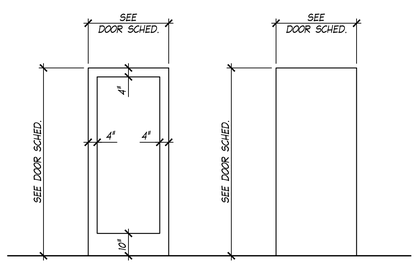

DOOR TYPE "A"
EXTERIOR ALUMINUM
STOREFRONT DOOR
(MEDIUM STILE)

DOOR TYPE "B"
EXTERIOR HOLLOW
METAL DOOR

3 DOOR TYPES

SCALE: 3/16" = 1'-0"

FRAME OPENING SCHEDULE

OPNG NO.	SPACE LOCATION	DOOR (AS APPLICABLE) TYPE	WIDTH	HGT.	THK.	MAT'L	HDW	FRAME TYPE	MAT'L	DETAIL REFERENCE HEAD	JAMB	THRES./SILL	FINISH DR.	FRM.	REMARKS REFER TO "FRAME OPENING SCHEDULE REMARKS" AS REFERENCED BELOW	NO.
1	STOREFRONT	A	3'-0"	7'-0"	BY MFR.	ALUM/ GLASS	2	AL-1	ALUM.	1/A4.1	-	1/A4.1	PREFIN	PREFIN	SEE NOTES 3, 4, 5 & 6	1
2	STOREFRONT	A	PR. 3'-0"	PR. 7'-0"	BY MFR.	ALUM/ GLASS	1	AL-3	ALUM.	1/A4.1 SIM.	-	1/A4.1	PREFIN	PREFIN	SEE NOTES 3, 4, 5, 6 & 7	2
3	EXIT/ENTRY	B	3'-6"	7'-0"	1-3/4"	HOLLOW MTL	3	HM-1	HM	5/A4.1	6/A4.1	7/A4.1	PAINT	PAINT	SEE NOTES 1, 2 & 5	3
A	SEE ELEVATION							AL-1	ALUM.	1/A4.1 2/A4.1	-	1/A4.1 2/A4.1	-	PREFIN	SEE NOTES 3, 4, 5 & 6	A
B	SEE ELEVATION							AL-2	ALUM.	2/A4.1	-	2/A4.1	-	PREFIN	SEE NOTES 3, 4, 5 & 6	B
C	SEE ELEVATION							AL-3	ALUM.	1/A4.1 SIM. 2/A4.1	-	1/A4.1 2/A4.1	-	PREFIN	SEE NOTES 3, 4, 5, 6 & 7	C
D	SEE ELEVATION							AL-4	ALUM.	3/A4.1 SIM.	-	8/A4.1	-	PREFIN	SEE NOTES 3, 4, 5 & 6	D
E	SEE ELEVATION							AL-5	ALUM.	3/A4.1 SIM.	-	8/A4.1	-	PREFIN	SEE NOTES 3, 4, 5 & 6 AND DRIVE-THRU WINDOW NOTES	E
F	SEE ELEVATION							AL-6	ALUM.	3/A4.1	-	4/A4.1	-	PREFIN	SEE NOTES 3, 4, 5 & 6 AND DRIVE-THRU WINDOW NOTES	F

GENERAL DOOR AND HARDWARE NOTES

A. DOOR CLOSURE ARMS SHALL PERMIT MAXIMUM DEGREE OF OPENING PERMITTED BY WALL CONDITIONS
B. DOOR CLOSURES SHALL BE APPLIED TO BOTH LEAVES OF A PAIR OF DOORS
C. SILENCERS TO BE FURNISHED ON ALL DOOR OPENINGS
D. THRESHOLDS TO BE FURNISHED WITH STAINLESS STEEL MACHINE SCREWS AND LEAD ANCHORS
E. FURNISH RESTROOM DOORS WITH 1" UNDERCUT, U.O.N.
F. ALL DOOR HANDLES SHALL BE LEVER TYPE WITH RETURNS TO WITHIN 1/2" OF THE DOOR FACE AND IN CONFORMANCE WITH ANSI 117.1, LATEST EDITION
G. CONTRACTOR SHALL RE-KEY DOORS AT COMPLETION OF PROJECT
H. ALL STEEL DOORS SHALL BE PAINTED PRIOR TO INSTALLATION OF HARDWARE
I. ALL EXTERIOR HOLLOW METAL DOORS AND FRAMES TO BE GALVANIZED
J. REFER TO FLOOR PLAN FOR DOOR SWINGS
K. EXIT DOORS: DURING BUSINESS HOURS EXIT DOORS SHALL BE OPERABLE FROM INSIDE WITHOUT USE OF A KEY
L. HARDWARE SUPPLIER TO VERIFY ALL HARDWARE COMPONENTS ARE COMPATIBLE WITH ACCOMPANYING ITEMS AND ARE IN COMPLIANCE WITH ALL STATE OR PRODUCT APPROVALS
M. HARDWARE SUPPLIER TO CONFIRM HARDWARE FINISHES MATCH STOREFRONT FINISH COLOR
N. ALL EXTERIOR DOORS SHALL MEET FLORIDA WINDSTORM REQUIREMENTS. THE DOOR HARDWARE SPECIFIED IS LISTED AS A BASIS OF DESIGN. IF ALTERNATE HARDWARE IS PROPOSED, PROVIDE FBC COMPLIANCE INFORMATION
O. DOOR CLOSERS SHALL MEET THE REQUIREMENTS OF THE **2020 FLORIDA ACCESSIBILITY SECTION 404.2.8** AND SHALL BE ADJUSTED SO THAT FROM AN OPEN POSITION OF 90°, THE TIME REQUIRED TO MOVE THE DOOR TO A POSITION OF 12° FROM THE LATCH IS 5 SECONDS, MINIMUM
P. EXTERIOR HINGED DOORS SHALL MEET THE REQUIREMENTS OF THE **2020 FLORIDA ACCESSIBILITY SECTION 404.2.9** AND SHALL BE DESIGNED SO THAT SUCH DOORS CAN BE PUSHED OR PULLED WITH A FORCE NOT EXCEEDING 8.5 POUNDS

THE CONTRACTOR SHALL OBTAIN DOOR AND STOREFRONT MANUFACTURER'S FLORIDA PRODUCT APPROVAL DATA AND INSTALLATION REQUIREMENTS AND MAKE AVAILABLE TO FIELD INSPECTORS UPON REQUEST

FRAME OPENING SCHEDULE REMARKS

1. PAINT DOOR AND FRAME, SEMI-GLOSS PAINT. REFER TO EXTERIOR ELEVATIONS FOR COLOR
2. PROVIDE INSULATED HOLLOW METAL DOOR
3. **ALUMINUM STOREFRONT FRAME AND DOOR COMPONENTS SHALL BE "BLACK"**
4. **ALUMINUM STOREFRONT BASED ON YKK YES 45FI SYSTEM WITH 1" INSULATED GLASS, CLEAR, LOW-E**
5. THE CONTRACTOR SHALL COORDINATE SUBMITTAL OF MANUFACTURER'S FLORIDA PRODUCT APPROVAL DATA AND INSTALLATION REQUIREMENTS WITH THE BUILDING DEPARTMENT, IF REQUIRED
6. PROVIDE SILL FLASHING CONTINUOUS ALONG BOTTOM OF ALL SILL MEMBERS. AT TERMINATION OF SILL FLASHING, PROVIDE END CAP OF EQUAL MATERIAL. SET ALL IN BED OF CONTINUOUS SEALANT
7. **PREP STOREFRONT FOR FUTURE AUTOMATIC DOOR ACTUATOR. REFER TO ELECTRICAL PLANS AND TENANT BUILD-OUT PLANS FOR LOCATION, HARDWARE AND ADDITIONAL INFORMATION**

DRIVE-THRU WINDOW

WINDOW UNIT
READY ACCESS "600 SERIES" WINDOW
MODEL 600MOER 43 1/2" HIGH X 47 1/2" WIDE
COLOR - DARK BRONZE
* DRIVE-THRU SHELF IS PROVIDED BY MANUFACTURER

READY ACCESS
1815 ARTHUR DRIVE
WEST CHICAGO, IL 60185
PH: 800-621-5045

HARDWARE SCHEDULE

HARDWARE SET NO. 1

QTY.	ITEM
(1)	ADAMS RITE DOOR LOCK MS1850S DEADBOLT WITH 4089 EXIT INDICATOR
(1)	ADAMS RITE DOOR LOCK MS2180 AUTOMATIC TWO POINT FLUSH BOLT (INACTIVE LEAF)
(1)	3-POINT LOCKING SYSTEM
(1)	BBW SIGN "THIS DOOR TO REMAIN UNLOCKED WHEN OCCUPIED"
(2)	DOOR CLOSER 8916 AF89P AL DORMA
(2)	FALCON 7 PIN CORE COMBINATED "A" KEYWAY 626 FINISH 1-1
(1)	FALCON CUT CONTROL KEY "A" KEYWAY
(9)	FALCON CUT USER KEY "A" KEYWAY
(2)	MORTISE CYL SHELL 7 PIN W/AR CAM S.CHROME (26D) FINISH.
(2)	ADJUSTABLE RING, MORTISE CYL 5/16-13/32 SATIN CHROME 26D FINISH
(1)	WEATHER STRIP
(2)	DOOR SWEEP WITH CONCEALED FASTENERS
(2)	DOOR PULL HANDLE CO-9 PULL AND CP-11 PUSH, #46 STAINLESS STEEL US32D DULL
(2)	ROCKWOOD DOOR STOP W/HOOK (473)
(2)	OFFSET PIVOTS, WITH FULLY MORTISED INTERMEDIATE PIVOT, **BLACK**
(1)	1/2" X 4" THRESHOLD, MILL FINISH
(1)	DRIP CAP

HARDWARE SET NO. 2

QTY.	ITEM
(1)	ADAMS RITE DOOR LOCK MS1850S DEADBOLT WITH 4089 EXIT INDICATOR
(1)	3-POINT LOCKING SYSTEM
(1)	BBW SIGN "THIS DOOR TO REMAIN UNLOCKED WHEN OCCUPIED"
(1)	DOOR CLOSER 8916 AF89P AL DORMA
(2)	FALCON 7 PIN CORE COMBINATED "A" KEYWAY 626 FINISH 1-1
(9)	FALCON CUT USER KEY "A" KEYWAY
(2)	MORTISE CYL SHELL 7 PIN W/AS CAM S.CHROME (26D) FINISH.
(2)	ADJUSTABLE RING, MORTISE CYL 5/16-13/32 SATIN CHROME 26D FINISH
(1)	DOOR PULL HANDLE CO-9 PULL AND CP-11 PUSH, #46 STAINLESS STEEL US32D DULL
(1)	ROCKWOOD DOOR STOP W/HOOK (473)
(1)	OFFSET PIVOTS, WITH FULLY MORTISED INTERMEDIATE PIVOT, **BLACK**
(1)	1/2" X 4" THRESHOLD, MILL FINISH
(1)	WEATHER STRIP
(1)	DOOR SWEEP WITH CONCEALED FASTENERS
(1)	DRIP CAP

HARDWARE SET NO. 3

QTY.	ITEM
(1)	DOOR CLOSER 8916 AF89P AL DORMA
(1)	FALCON C607 7PIN CORE COMBINATED "A" KEYWAY 626
(1)	SUR-LOCK AUTO LOCKING DOOR ALARM, 1/0 2000L-031C; NO CTR INCLUDES MORTISE CYLINDER
(1)	DOOR SPY, DESCO, SILVER, DS-6
(1)	NGP WEATHER STRIP 17' 46"X 84"
(1)	NUTONE DOOR BELL
(1)	NATIONAL GUARD DOOR SWEEP 42"
(1)	ROCKWOOD KICKPLATE 10" HIGH X 2" LESS DOOR WIDTH
(1)	FULL MORTISE HEAVY DUTY CONTINUOUS GEARED HINGE
(1)	ROCKWOOD DOOR STOP W/HOOK (473)
(1)	1/2" HIGH X 5" WIDE,THRESHOLD NOTCHED AND CUT TO LENGTH
(1)	FULL LENGTH STEEL ASTRAGRAL
(1)	DRIP CAP

FWH Architects
3336 Grand Blvd. Suite 201
Holiday, Florida 34690
Ph. 727. 815. 3336
Fax 727. 815. 3337

TO THE BEST OF THE KNOWLEDGE OF THE ARCHITECTS AND ENGINEERS, PLANS AND SPECIFICATIONS COMPLY WITH THE APPLICABLE MINIMUM BUILDING CODES AND THE APPLICABLE MINIMUM FIRE SAFETY STANDARDS

GUY F. FABER
FL License No. AR0015323

no.	date	revision descriptions

STARBUCKS
SHELL CONSTRUCTION
1990 STATE ROAD 19
TAVARES, FL

03.25.2024
date

24007
comm. no.

FRAME OPENING SCHEDULE

A4.0

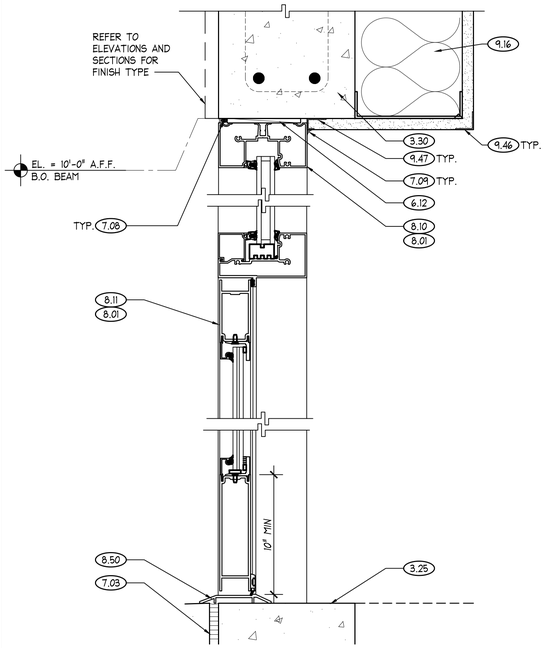

1 STOREFRONT HEAD/ THRESHOLD DETAIL

SCALE: 3" = 1'-0"

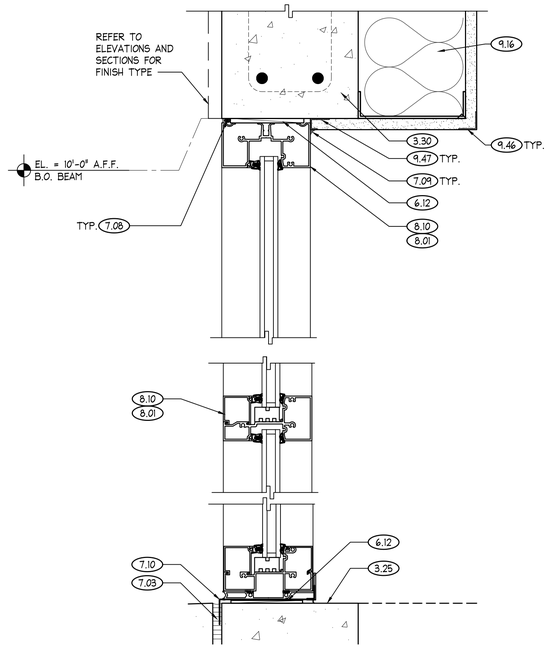

2 STOREFRONT HEAD/ THRESHOLD DETAIL

SCALE: 3" = 1'-0"

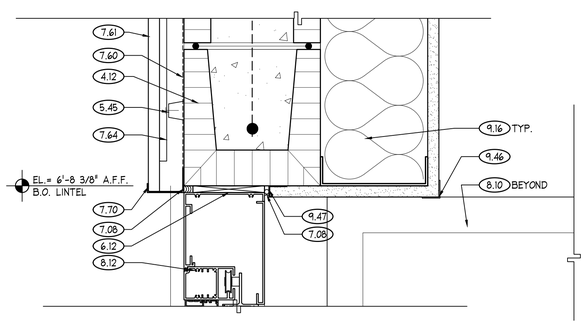

3 DRIVE-THRU HEAD DETAIL

SCALE: 3" = 1'-0"

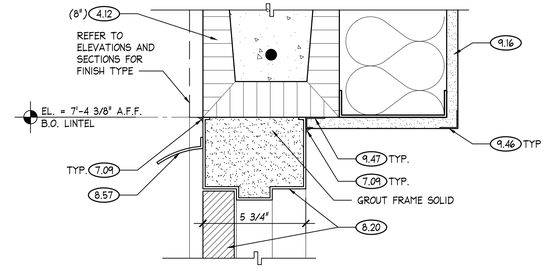

5 DOOR HEAD DETAIL

SCALE:3" = 1'-0"

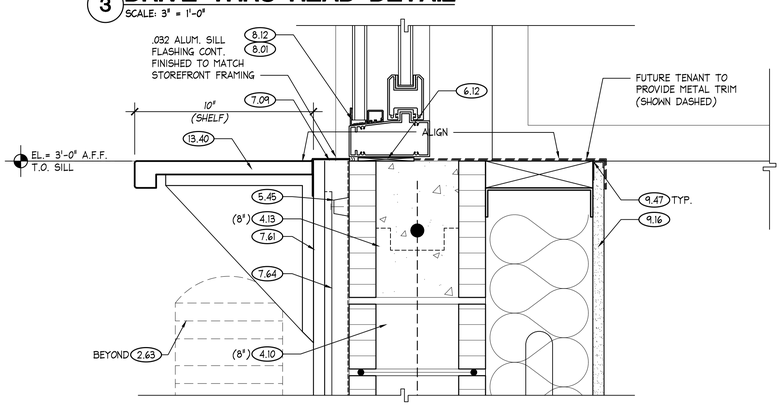

4 DRIVE-THRU SILL DETAIL

SCALE: 3" = 1'-0"

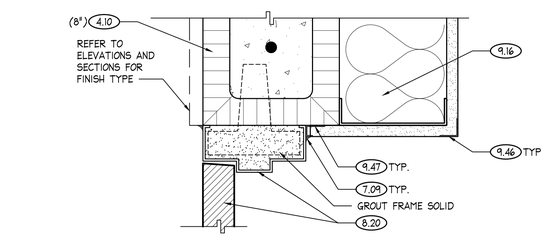

6 DOOR JAMB DETAIL

SCALE: 3" = 1'-0"

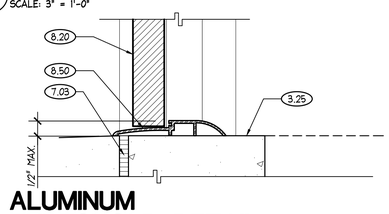

7 ALUMINUM THRESHOLD DETAIL

SCALE: 3" = 1'-0"

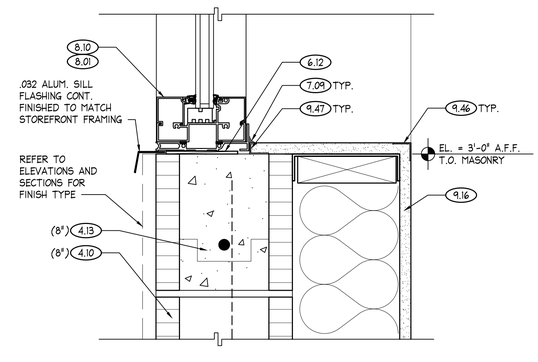

8 SILL DETAIL

SCALE: 3" = 1'-0"

FWH Architects
3336 Grand Blvd. Suite 201
Holiday, Florida 34690
Ph. 727. 815. 3336
Fax 727. 815. 3337

TO THE BEST OF THE KNOWLEDGE OF THE ARCHITECTS AND ENGINEERS, PLANS AND SPECIFICATIONS COMPLY WITH THE APPLICABLE MINIMUM BUILDING CODES AND THE APPLICABLE MINIMUM FIRE SAFETY STANDARDS

GUY F. FABER
FL License No. AR0015323

no.	date	revision descriptions

STARBUCKS
SHELL CONSTRUCTION
1990 STATE ROAD 19
TAVARES, FL

03.25.2024
date

24007
comm. no.

FRAME OPENING DETAILS

A4.1

REFER TO SHEET A0.3 FOR THE KEYNOTES REFERENCED THROUGHOUT THE CONSTRUCTION DRAWINGS

TO THE FULLEST EXTENT POSSIBLE, BUILDING COMPONENTS WILL BE MARKED AS 'TYPICAL' (TYP.). WHERE SO, KEYED NOTES WILL NOT BE DUPLICATED FOR COMPONENTS OF LIKE KIND. SHOULD THE CONTRACTOR REQUIRE CLARIFICATION OF ANY SUCH COMPONENT, A REQUEST FOR INFORMATION (RFI) SHALL BE SUBMITTED TO THE ARCHITECT PRIOR TO BID.

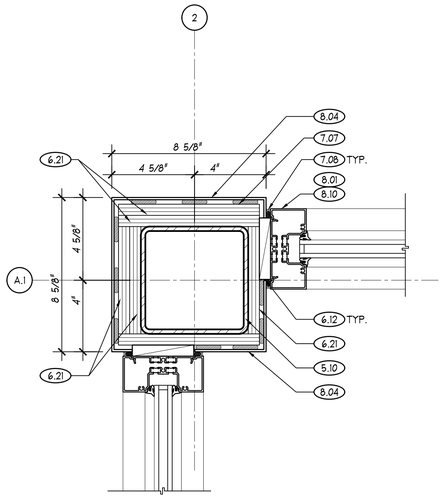

3 **PLAN DETAIL**
SCALE: 3" = 1'-0"

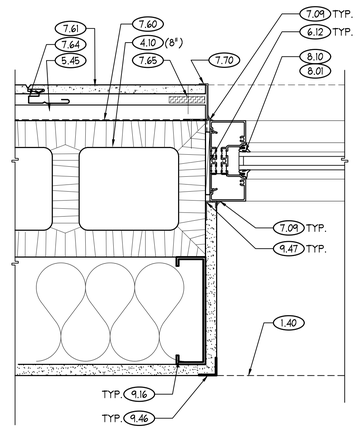

2 **PLAN DETAIL**
SCALE: 3" = 1'-0"

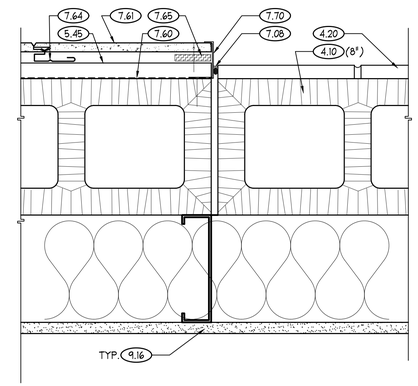

1 **PLAN DETAIL**
SCALE: 3" = 1'-0"

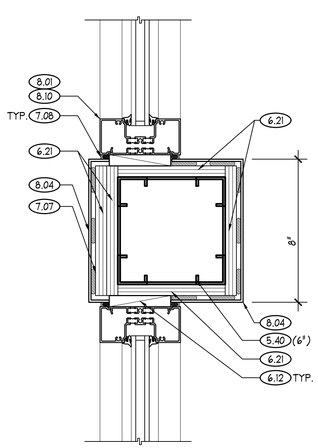

4 **PLAN DETAIL**
SCALE: 3" = 1'-0"

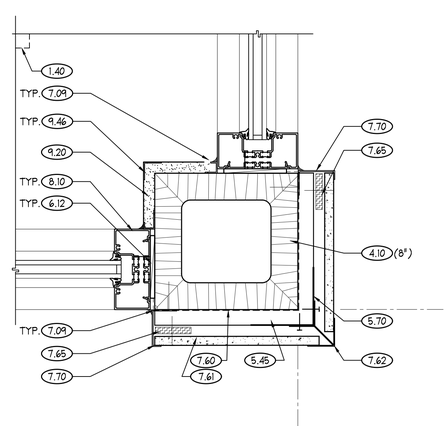

5 **PLAN DETAIL**
SCALE: 3" = 1'-0"

FWH Architects
3336 Grand Blvd. Suite 201
Holiday, Florida 34690
Ph. 727. 815. 3336
Fax 727. 815. 3337

TO THE BEST OF THE KNOWLEDGE OF THE ARCHITECTS AND ENGINEERS, PLANS AND SPECIFICATIONS COMPLY WITH THE APPLICABLE MINIMUM BUILDING CODES AND THE APPLICABLE MINIMUM FIRE SAFETY STANDARDS

GUY F. FABER
FL License No. AR0015323

no.	date	revision descriptions

STARBUCKS
SHELL CONSTRUCTION
1990 STATE ROAD 19
TAVARES, FL

03.25.2024
date

24007
comm. no.

ENLARGED PLAN DETAILS

A4.2

REFER TO SHEET A0.3 FOR THE KEYNOTES REFERENCED THROUGHOUT THE CONSTRUCTION DRAWINGS

TO THE FULLEST EXTENT POSSIBLE, BUILDING COMPONENTS WILL BE MARKED AS 'TYPICAL' (TYP.). WHERE SO, KEYED NOTES WILL NOT BE DUPLICATED FOR COMPONENTS OF LIKE KIND. SHOULD THE CONTRACTOR REQUIRE CLARIFICATION OF ANY SUCH COMPONENT, A REQUEST FOR INFORMATION (RFI) SHALL BE SUBMITTED TO THE ARCHITECT PRIOR TO BID.

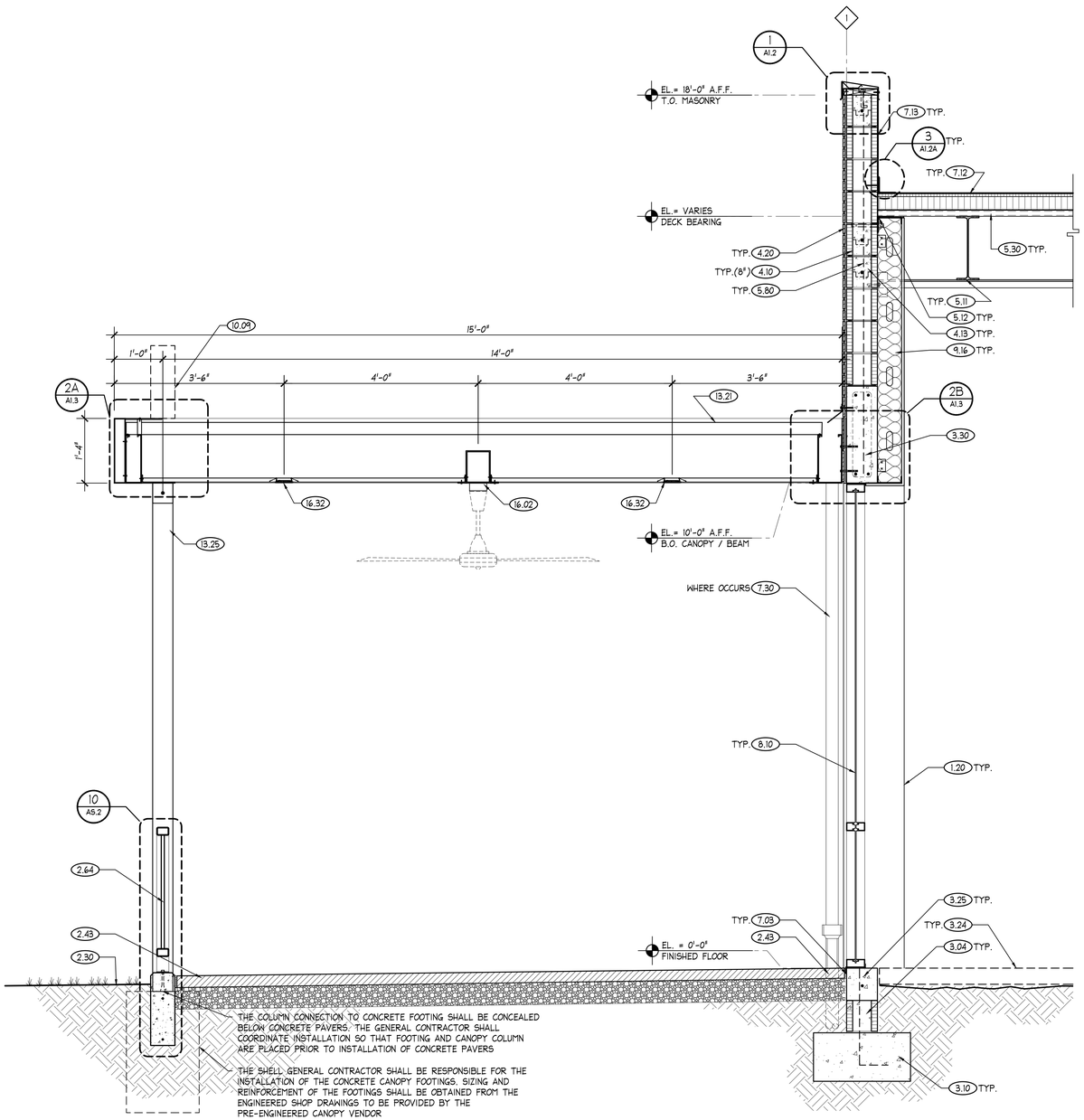

1 WALL SECTION
SCALE: 3/4" = 1'-0"

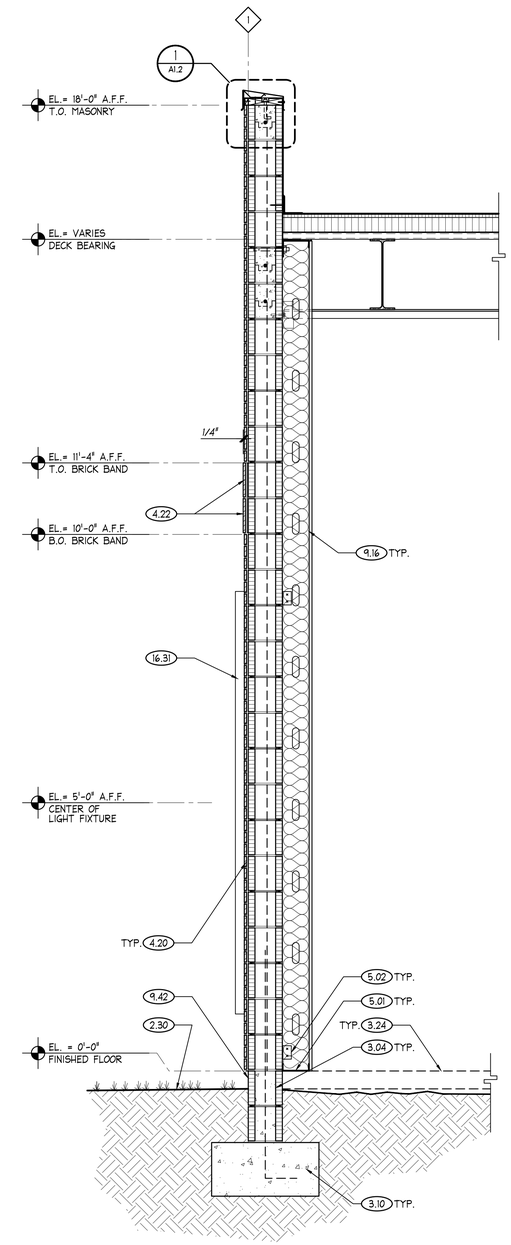

2 WALL SECTION
SCALE: 3/4" = 1'-0"

FWH Architects
3336 Grand Blvd. Suite 201
Holiday, Florida 34690
Ph. 727. 815. 3336
Fax 727. 815. 3337

TO THE BEST OF THE KNOWLEDGE OF THE ARCHITECTS AND ENGINEERS, PLANS AND SPECIFICATIONS COMPLY WITH THE APPLICABLE MINIMUM BUILDING CODES AND THE APPLICABLE MINIMUM FIRE SAFETY STANDARDS

GUY F. FABER
FL License No. AR0015323

no.	date	revision descriptions

STARBUCKS
SHELL CONSTRUCTION
1990 STATE ROAD 19
TAVARES, FL

03.25.2024
date

24007
comm. no.

WALL SECTIONS

A5.0

REFER TO SHEET A0.3 FOR THE KEYNOTES REFERENCED THROUGHOUT THE CONSTRUCTION DRAWINGS

TO THE FULLEST EXTENT POSSIBLE, BUILDING COMPONENTS WILL BE MARKED AS 'TYPICAL' (TYP.). WHERE SO, KEYED NOTES WILL NOT BE DUPLICATED FOR COMPONENTS OF LIKE KIND. SHOULD THE CONTRACTOR REQUIRE CLARIFICATION OF ANY SUCH COMPONENT, A REQUEST FOR INFORMATION (RFI) SHALL BE SUBMITTED TO THE ARCHITECT PRIOR TO BID.

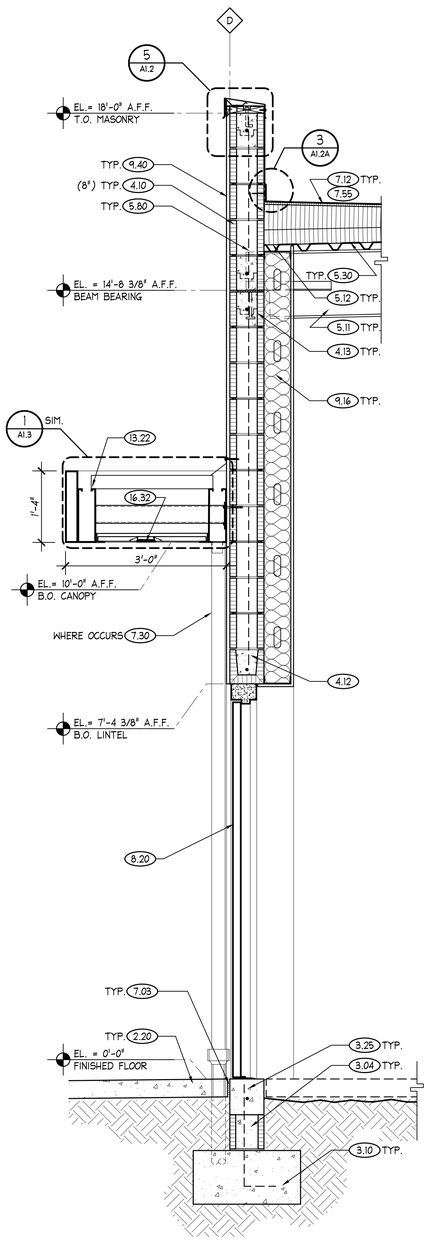

1 WALL SECTION
SCALE: 3/4" = 1'-0"

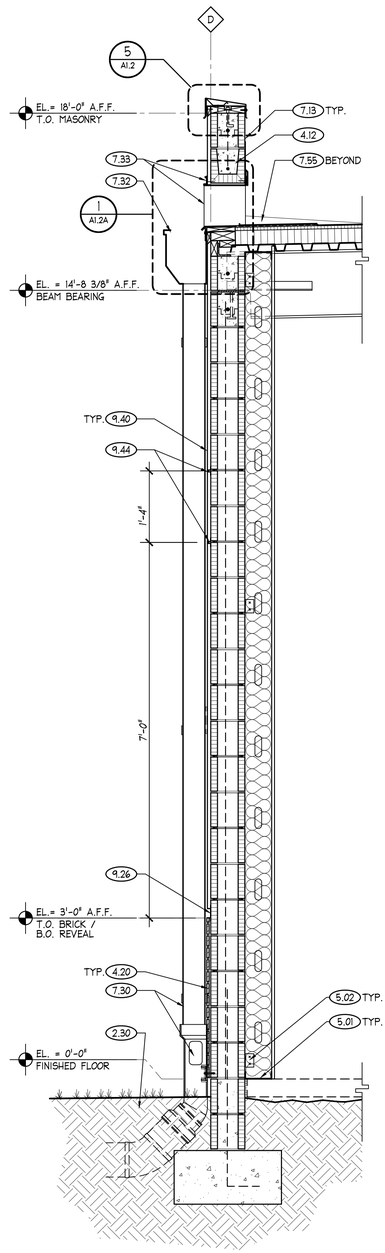

2 WALL SECTION
SCALE: 3/4" = 1'-0"

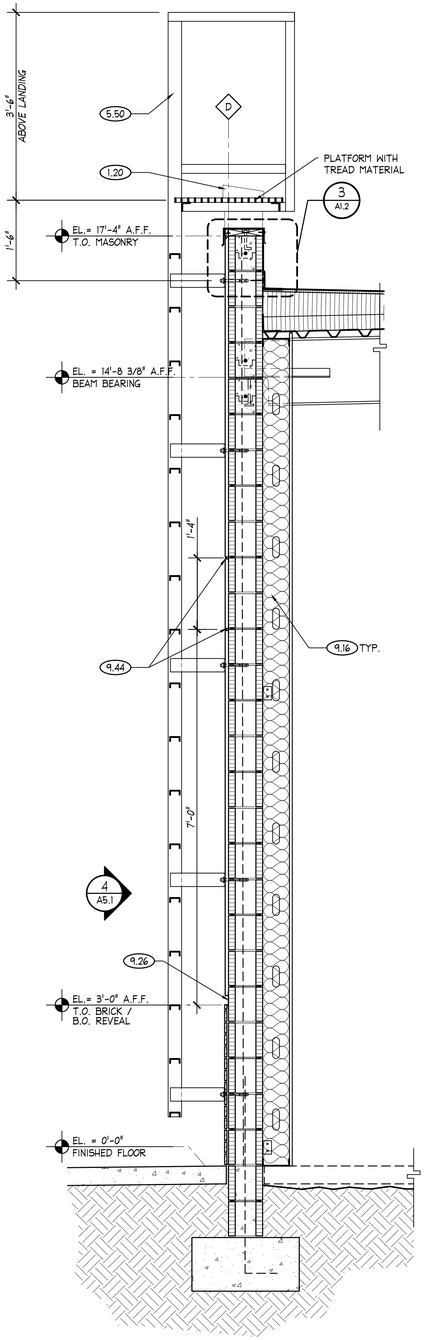

3 WALL SECTION
SCALE: 3/4" = 1'-0"

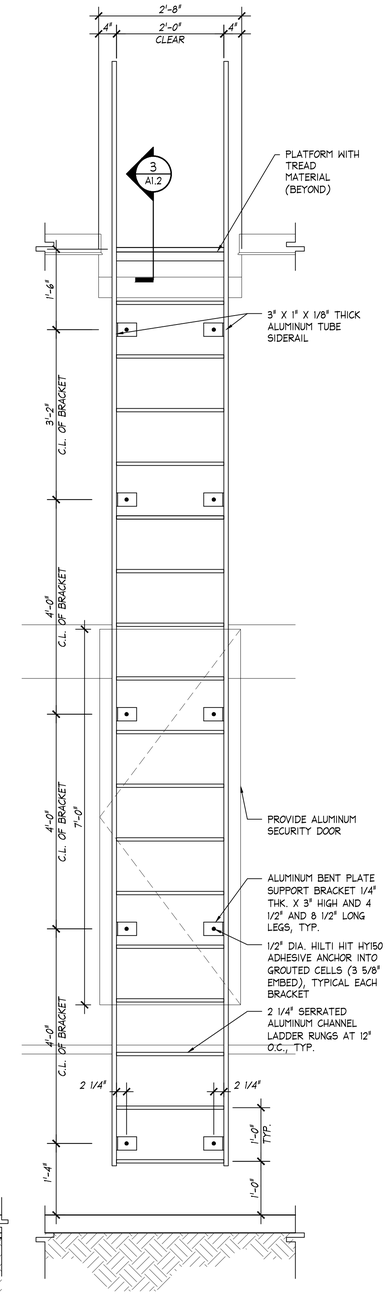

4 LADDER DETAIL
SCALE: 3/4" = 1'-0"

LADDER CONSTRUCTION NOTES:

DRAWINGS INDICATE THE DESIGN INTENT FOR ROOF ACCESS LADDER COMPONENTS

ALL COMPONENTS SHALL BE INDICATED ON SEPARATE SHOP DRAWINGS PROVIDED BY THE LADDER FABRICATOR, INCLUDING METHOD OF ATTACHMENT, WELDED CONNECTIONS, AND DETAILING FOR THE LOCKING SECURITY GATE MECHANISM. SAID SHOP DRAWINGS SHALL BE SUBMITTED TO THE ARCHITECT FOR APPROVAL PRIOR TO FABRICATION

ALL WELDS SHALL BE GROUND SMOOTH

ALL LADDER COMPONENTS SHALL BE ALUMINUM WITH MILL FINISH

LADDER AND COMPONENTS SHALL BE **MODEL NO. FL-12** AS MANUFACTURED BY PRECISION LADDERS, LLC, TEL. NO. (423)586-2265, WWW. PRECISIONLADDERS.COM OR APPROVED EQUIVALENT

THE LADDER SHALL INCLUDE A COMPLETE ASSEMBLY INCLUDING THE FOLLOWING COMPONENTS:
- LADDER
- PLATFORM AT PARAPET AND SAFETY RAILS
- SECURITY GATE

FWH Architects
3336 Grand Blvd. Suite 201
Holiday, Florida 34690
Ph. 727. 815. 3336
Fax 727. 815. 3337

TO THE BEST OF THE KNOWLEDGE OF THE ARCHITECTS AND ENGINEERS, PLANS AND SPECIFICATIONS COMPLY WITH THE APPLICABLE MINIMUM BUILDING CODES AND THE APPLICABLE MINIMUM FIRE SAFETY STANDARDS

GUY F. FABER
FL License No. AR0015323

no.	date	revision descriptions

STARBUCKS
SHELL CONSTRUCTION
1990 STATE ROAD 19
TAVARES, FL

03.25.2024
date

24007
comm. no.

WALL SECTIONS

A5.1

REFER TO SHEET A0.3 FOR THE KEYNOTES REFERENCED THROUGHOUT THE CONSTRUCTION DRAWINGS

TO THE FULLEST EXTENT POSSIBLE, BUILDING COMPONENTS WILL BE MARKED AS 'TYPICAL' (TYP.). WHERE SO, KEYED NOTES WILL NOT BE DUPLICATED FOR COMPONENTS OF LIKE KIND. SHOULD THE CONTRACTOR REQUIRE CLARIFICATION OF ANY SUCH COMPONENT, A REQUEST FOR INFORMATION (RFI) SHALL BE SUBMITTED TO THE ARCHITECT PRIOR TO BID.

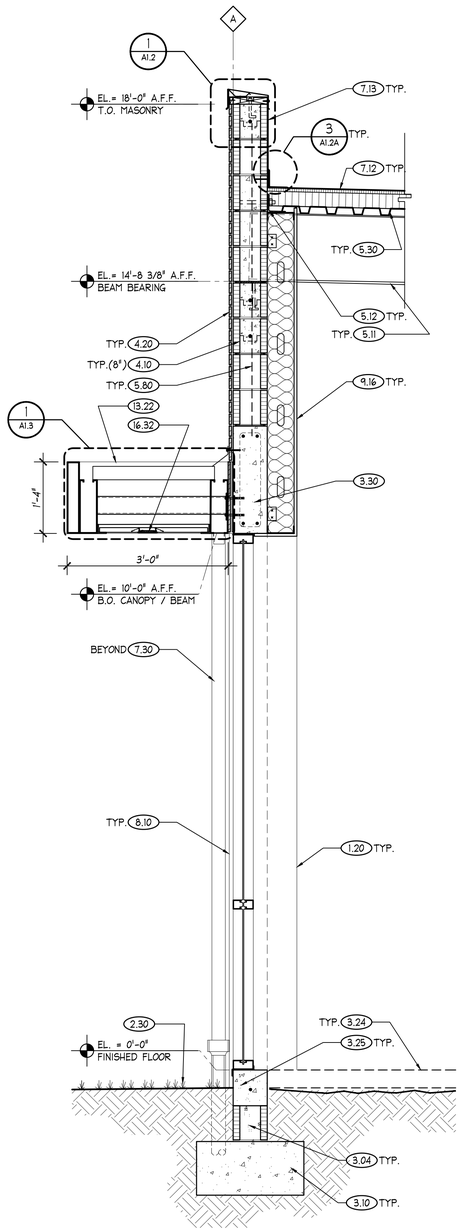

1 **WALL SECTION**
SCALE: 3/4" = 1'-0"

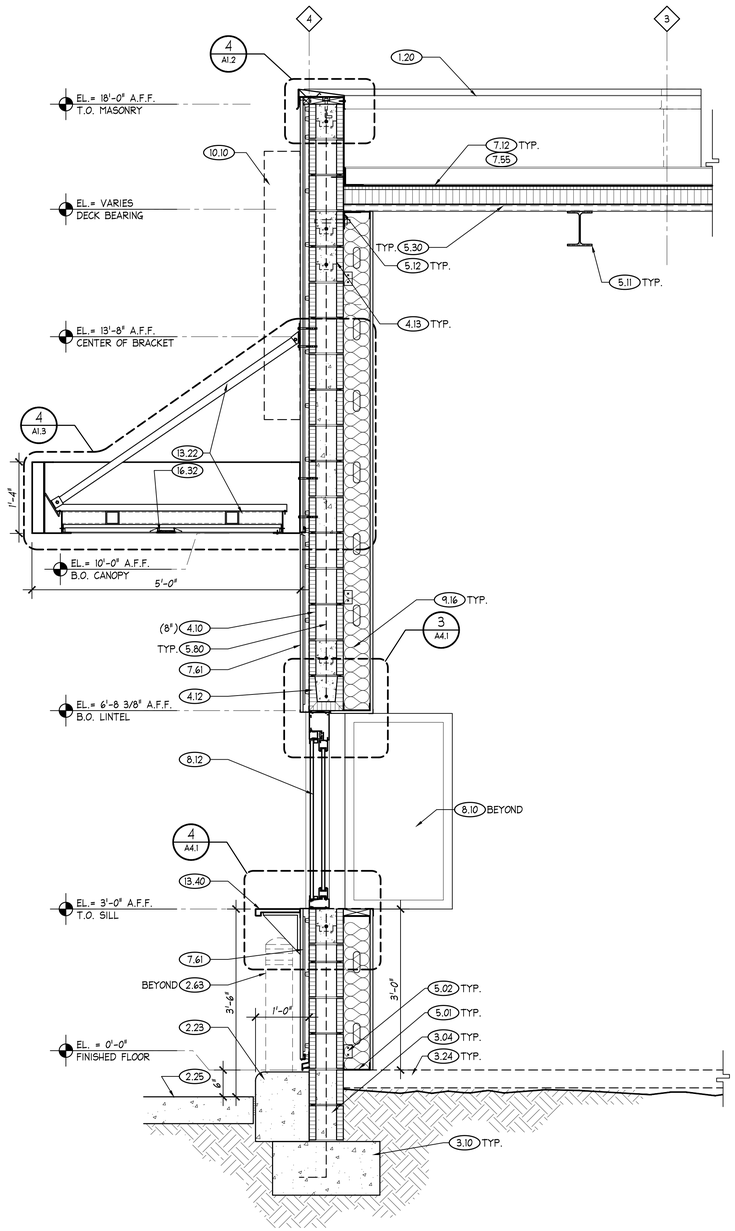

2 **WALL SECTION**
SCALE: 3/4" = 1'-0"

FWH Architects
3336 Grand Blvd. Suite 201
Holiday, Florida 34690
Ph. 727. 815. 3336
Fax 727. 815. 3337

TO THE BEST OF THE KNOWLEDGE OF THE ARCHITECTS AND ENGINEERS, PLANS AND SPECIFICATIONS COMPLY WITH THE APPLICABLE MINIMUM BUILDING CODES AND THE APPLICABLE MINIMUM FIRE SAFETY STANDARDS

GUY F. FABER
FL License No. AR0015323

no.	date	revision descriptions

STARBUCKS
SHELL CONSTRUCTION
1990 STATE ROAD 19
TAVARES, FL

03.25.2024
date

24007
comm. no.

WALL SECTIONS

A5.2

MISCELLANEOUS

1. THE STRUCTURAL SYSTEM IS UNSTABLE UNTIL ALL CONNECTIONS HAVE BEEN MADE AND ALL CONCRETE HAS REACHED ITS MINIMUM DESIGN STRENGTH, AS SHOWN IN THE STRUCTURAL DOCUMENTS.
2. THE STRUCTURAL DOCUMENTS AND SPECIFICATIONS REPRESENT THE FINISHED STRUCTURE AND DO NOT INDICATE THE METHOD OR MEANS OF CONSTRUCTION. THE CONTRACTOR SHALL BE SOLELY RESPONSIBLE FOR ALL CONSTRUCTION MEANS, METHODS, PROCEDURES, TECHNIQUES AND SEQUENCES.
3. CONTRACTOR TO SUPPORT, BRACE AND SECURE EXISTING STRUCTURE AS REQUIRED. CONTRACTOR IS SOLELY RESPONSIBLE FOR THE SAFETY OF THE BUILDING DURING CONSTRUCTION.
4. APPLICABLE BUILDING CODE: FLORIDA BUILDING CODE 8TH EDITION (2023).
5. ALL MATERIALS AND WORKMANSHIP SHALL BE IN ACCORDANCE WITH THE FLORIDA BUILDING CODE 8TH EDITION (2023).
6. DESIGN GRAVITY LOADS:

AREA	SUPERIMPOSED LIVE LOAD (FBC, TABLE 1607.1)
ROOF	20 PSF
FLOOR	100 PSF (SLAB-ON-GROUND)
CANOPY	20 PSF

AREA	DEAD LOAD
ROOF	20 PSF

7. ULTIMATE DESIGN WIND SPEED = 132 MPH (FBC, FIGURE 1609.3.1)
   ASD NOMINAL DESIGN WIND SPEED = 102 MPH (FBC, TABLE 1609.3.1)
   RISK CATEGORY II (FBC, TABLE 1604.5)
   REFER TO 1/S0.1 FOR WIND PRESSURES AND MORE INFO.
8. RAIN INTENSITY: 7.50 IN/HR (15–MIN), 3.90 IN/HR (60–MIN)
9. COORDINATE ALL DIMENSIONS AND ELEVATIONS WITH THE ARCHITECTURAL DRAWINGS. DO NOT SCALE DRAWINGS.
10. CONTACT ENGINEER WITH ANY QUESTIONS OR DISCREPANCIES FOUND ON DRAWINGS.
11. THESE GENERAL NOTES SUPPLEMENT THE PROJECT SPECIFICATIONS. REFER TO PROJECT SPECIFICATIONS FOR ADDITIONAL REQUIREMENTS.
12. NO CHANGE IN SIZE OR DIMENSION OF STRUCTURAL MEMBERS SHALL BE MADE WITHOUT THE WRITTEN APPROVAL OF THE PROFESSIONAL OF RECORD.
13. THE CONTRACTOR IS RESPONSIBLE FOR LIMITING THE AMOUNT OF CONSTRUCTION LOAD IMPOSED UPON STRUCTURAL FRAMING. CONSTRUCTION LOADS SHALL NOT EXCEED THE DESIGN CAPACITY OF THE FRAMING AT THE TIME THE LOADS ARE IMPOSED.
14. THE CONTRACTOR SHALL INFORM THE PROFESSIONAL OF RECORD IN WRITING OF ANY DEVIATION FROM THE CONTRACT DOCUMENTS. THE CONTRACTOR SHALL NOT BE RELIEVED OF THE RESPONSIBILITY OF SUCH DEVIATION BY THE PROFESSIONAL OF RECORD'S REVIEW OF SHOP DRAWINGS, PRODUCT DATA, ETC., UNLESS THE CONTRACTOR HAS SPECIFICALLY INFORMED THE PROFESSIONAL OF RECORD OF SUCH DEVIATION AT THE TIME OF SUBMISSION, AND THE PROFESSIONAL OF RECORD HAS GIVEN WRITTEN APPROVAL TO THE SPECIFIC DEVIATION.

MATERIAL AND SHOP DRAWING SUBMITTALS

1. SHOP DRAWINGS SHALL BE REVIEWED BY THE CONTRACTOR AND MARKED "APPROVED" PRIOR TO SUBMITTING TO THE ARCHITECT. NON–CONFORMING SUBMITTALS WILL BE RETURNED WITHOUT REVIEW.
2. SUBMIT SHOP DRAWINGS AS REQUIRED HEREIN IN DIGITAL PDF FORMAT WITH A HIGH–RESOLUTION. ALLOW FOR TWO WEEKS REVIEW TIME AFTER RECEIPT OF SUBMITTALS BY THIS FIRM. ALL SUBMITTALS SHALL BE SIGNED/SEALED BY THE SPECIALTY OR DELEGATED ENGINEER, AS NOTED BELOW. REFER TO THE SPECIFIC SECTION ON THIS SHEET FOR MORE INFORMATION REGARDING THE SHOP DRAWING SUBMITTAL.
   A) STRUCTURAL STEEL
   B) CONCRETE MIX DESIGN
   C) CONCRETE REINFORCING STEEL
   D) MASONRY REINFORCING STEEL
   E) PRECAST CONCRETE MASONRY
   F) METAL DECK
3. CONTRACTOR SHALL NOT BE RELIEVED FROM RESPONSIBILITY FOR ERRORS OR OMISSIONS IN SHOP DRAWINGS OR MIX DESIGNS BY THE ENGINEER'S REVIEW THEREOF.
4. SHOP DRAWINGS WILL BE REVIEWED FOR GENERAL COMPLIANCE WITH THE DESIGN INTENT OF THE CONTRACT DOCUMENTS ONLY. IT SHALL BE THE RESPONSIBILITY OF THE CONTRACTOR TO VERIFY COMPLIANCE WITH THE CONTRACT DOCUMENTS AS TO QUANTITY, LENGTHS, DIMENSIONS, ETC.
5. SHOP DRAWING REVIEW COMMENTS BY THIS FIRM SHALL BE TRANSMITTED TO THE ARCHITECT OF RECORD ONLY FOR THEIR REVIEW. THE ARCHITECT WILL TRANSMIT AN ELECTRONIC COPY OF ALL REVIEWED SUBMITTALS TO THE CONTRACTOR. THE CONTRACTOR IS RESPONSIBLE FOR DISTRIBUTING THE REVIEWED SHOP DRAWINGS TO THE IMPACTED TRADES OR SUBCONTRACTORS.
6. CHANGES AND ADDITIONS MADE ON SHOP DRAWING RE–SUBMITTALS SHALL BE CLEARLY FLAGGED AND NOTED AS SUCH. THE PURPOSE OF THE RE–SUBMITTAL SHALL BE NOTED IN THE SUBMITTAL OR ON A TRANSMITTAL ATTACHED TO THE SHOP DRAWINGS. A RE–REVIEW OF THE REVISED SHOP DRAWING SUBMITTAL WILL BE LIMITED TO THOSE ITEMS CAUSING THE RE–SUBMITTAL. THE CONTRACTOR IS RESPONSIBLE FOR THE COSTS ASSOCIATED WITH RE–SUBMITTING MULTIPLE (MORE THAN ONE) SHOP DRAWING SUBMITTALS AT THE ENGINEER OF RECORD'S HOURLY RATES.

SITE WORK

1. A SUBSURFACE INVESTIGATION HAS BEEN COMPLETED AT THE PROJECT SITE BY **UNIVERSAL ENGINEERING SCIENCES, LLC.** SOIL BORING LOGS AND SITE PREPARATION PROCEDURES ARE INCLUDED IN THE PROJECT SOILS REPORT, DATED **FEBRUARY 22, 2024** WHICH IS AN INTEGRAL PART OF THESE CONTRACT DOCUMENTS.
2. ALL SITE WORK SHALL BE DONE IN STRICT ACCORDANCE WITH THE PROJECT SOILS REPORT, **PROJECT NO. 0130.2400043.0000**.
3. **DESIGN SOIL BEARING PRESSURE = 2,500 PSF**.
4. A QUALIFIED TESTING LABORATORY SHALL BE RETAINED TO PERFORM THE FOLLOWING TESTS:
   A) ONE DENSITY TEST FOR EACH 2,000 SQUARE FEET OF COMPACTED SUBGRADE AND COMPACTED FILL.
   B) ONE DENSITY TEST AT EACH COLUMN FOOTING.
   C) ONE DENSITY TEST PER 50 FEET OF WALL FOOTING.
5. ONE COPY OF ALL TEST REPORTS SHALL BE SENT DIRECTLY TO OWNER, ARCHITECT, STRUCTURAL ENGINEER, AND GENERAL CONTRACTOR.
6. FOUNDATION WALLS THAT RETAIN EARTH SHALL BE BRACED AGAINST BACKFILLING PRESSURES UNTIL FLOOR SLABS AT TOP AND BOTTOM ARE IN PLACE.
7. THE SIDES OF FOOTINGS MAY BE EARTH–FORMED IF THE EXCAVATION CAN BE KEPT VERTICAL, CLEAN, AND STABLE; OTHERWISE, PLYWOOD FORMS MUST BE USED.

CAST IN PLACE CONCRETE

1. CONCRETE TO BE NORMAL WEIGHT WITH THE FOLLOWING MINIMUM COMPRESSIVE STRENGTHS AT 28 DAYS:
   A) FOOTINGS, SLAB–ON–GRADE........3000 PSI
   B) COLUMNS, BEAMS.................4000 PSI
2. CONCRETE SHALL BE READYMIX PER ASTM C94:
   A) PORTLAND CEMENT – ASTM C 150
   B) AGGREGATES – ASTM C33 (3/4" MAX.)
   C) NO CALCIUM CHLORIDE
   D) AIR ENTRAINING – ASTM C260
   E) WATER REDUCING – ASTM C494
   F) FLYASH – ASTM C618 CLASS F (20% MAXIMUM BY WEIGHT)
   G) WATER – CLEAN AND POTABLE
3. REINFORCING STEEL: ASTM A615 GRADE 60.
4. REQUIRED SLUMP RANGE = 3" TO 5".
5. WELDED WIRE FABRIC: ASTM A–185. FURNISH IN SHEETS, NOT ROLLS.
6. MOISTURE/VAPOR RETARDER: 15 MIL POLYETHYLENE. LAP 6" AND TAPE ALL JOINTS.
7. CODES AND STANDARDS: (CURRENT EDITION)
   ACI 301 "SPEC FOR STRUCTURAL CONCRETE FOR BUILDINGS."
   ACI 305 "RECOMMENDED PRACTICE FOR HOT WEATHER CONCRETING."
   ACI 318 "BLDG. CODE REQUIREMENTS FOR REINF. CONCRETE."
   ACI 315 "DETAILS AND DETAILING OF CONCRETE REINFORCEMENT."
8. MINIMUM LAP SPLICE = 30 BAR DIAMETERS UNLESS NOTED OTHERWISE.
9. PROVIDE PROPERLY TIED SPACERS, CHAIRS, BOLSTERS, ETC, AS REQUIRED AND NECESSARY TO ASSEMBLE, PLACE AND SUPPORT ALL REINFORCING IN PLACE. USE WIRE BAR TYPE SUPPORTS COMPLYING WITH CRSI RECOMMENDATIONS. USE PLASTIC TIP LEGS ON ALL EXPOSED SURFACES.
10. CONTRACTOR SHALL VERIFY LOCATIONS OF ALL OPENINGS, SLEEVES, AND SLAB RECESSES AS REQUIRED BY OTHER TRADES BEFORE CONCRETE IS PLACED. NO SLEEVE, OPENING, OR INSERT MAY BE PLACED IN BEAMS OR COLUMNS UNLESS APPROVED BY THE ENGINEER.
11. CONTRACTOR SHALL VERIFY EMBEDDED ITEMS, INCLUDING BUT NOT LIMITED TO ANCHOR BOLTS, BOLT CLUSTERS, WELD PLATES, ETC..., BEFORE PLACING CONCRETE. NOTIFY ENGINEER OF ANY CONFLICTS WITH REBAR.
12. SEE ARCHITECTURAL DRAWINGS FOR REQUIRED CONCRETE FINISHES.
13. ALL CONCRETE SHALL BE CURED IMMEDIATELY AFTER FINISHING OPERATIONS IN ACCORDANCE WITH ONE OF THE FOLLOWING METHODS:
   A) APPLY A 30% SOLIDS LIQUID MEMBRANE FORMING CHEMICAL CURING COMPOUND IN ACCORDANCE WITH ASTM C–309.
   B) PROVIDE CONTINUOUS MOISTURE TO CONCRETE IN ACCORDANCE WITH ACI 301.
14. GENERAL CONTRACTOR IS RESPONSIBLE FOR THE PROPER DESIGN AND CONSTRUCTION OF ALL FORMWORK, SHORING, AND RESHORING. DESIGN SHALL BE PERFORMED BY A LICENSED FLORIDA ENGINEER.
15. A QUALIFIED TESTING LABORATORY SHALL BE RETAINED TO PERFORM THE FOLLOWING CONCRETE TESTS ON SITE.
   A) CYLINDER STRENGTH TESTS – ASTM C39; ONE SET OF FOUR CYLINDERS FOR EACH 50 CUBIC YARDS OR FRACTION THEREOF. TEST ONE CYLINDER AT 7 DAYS AND TWO AT 28 DAYS. HOLD THE FINAL CYLINDER IN RESERVE.
   B) SLUMP TESTS – ASTM C143
16. ONE COPY OF ALL TEST REPORTS SHALL BE SENT DIRECTLY TO OWNER, ARCHITECT, STRUCTURAL ENGINEER, AND GENERAL CONTRACTOR.
17. RESTRICT THE ADDITION OF MIX WATER AT THE JOB SITE. DO NOT ADD WATER WITHOUT THE APPROVAL OF THE GENERAL CONTRACTOR AND DO NOT EXCEED SLUMP LIMITATIONS OR TOTAL ALLOWABLE WATER TO CEMENT RATIO. USE COLD WATER FROM THE TRUCK TANK AND REMIX TO ACHIEVE CONSISTENCY. TEST REPORTS SHALL INDICATE QUANTITY OF WATER ADDED AT THE JOB SITE. ALL TESTS SHALL BE PREPARED AFTER THE ADDITION OF WATER TO THE MIX.
18. MAXIMUM WATER TO CEMENT RATIO WHEN NO BACK–UP DATA IS AVAILABLE:
   A) 4000 PSI, 28–DAY COMPRESSIVE STRENGTH; W/C RATIO, 0.44 MAXIMUM (NON–AIR–ENTRAINED), 0.36 MAXIMUM (AIR–ENTRAINED).
   B) 3000 PSI, 28–DAY COMPRESSIVE STRENGTH; W/C RATIO, 0.58 MAXIMUM (NON–AIR–ENTRAINED), 0.47 MAXIMUM (AIR–ENTRAINED).
19. REINFORCING BAR COVER:
   A) FOOTINGS 3"
   B) COLUMNS 1–1/2"
   C) BEAMS 1–1/2"
   D) SLABS 3/4" (INTERIOR) 1–1/2" (EXTERIOR)
20. CONCRETE SHALL BE PLACED WITHIN 90 MINUTES OF BATCH TIME.
21. WHERE BAR LENGTHS ARE GIVEN ON DRAWINGS, LENGTH OF HOOK, IF REQUIRED, IS NOT INCLUDED.
22. PROVIDE COMMERCIAL FORM COATING COMPOUNDS THAT WILL NOT BOND, STAIN, OR ADVERSELY AFFECT CONCRETE SURFACES. WET FORMS BEFORE PLACING CONCRETE.
23. ALL CONCRETE SHALL BE CONSOLIDATED IN PLACE USING INTERNAL VIBRATORS.
24. REPAIR AND PATCH DEFECTIVE AREAS WITH CEMENT MORTAR IMMEDIATELY AFTER REMOVAL OF FORMS, EXCEPT WHERE REINFORCING IS VISIBLE. CONTACT STRUCTURAL ENGINEER FOR EVALUATION OF EXPOSED REINFORCING.
25. PROVIDE CORNER BARS AT ALL BEAM AND WALL FOOTING CORNERS TO MATCH HORIZONTAL BARS.
26. SUBMITTALS:
   A) SUBMIT PROPOSED CONCRETE MIX DESIGN PRIOR TO CONSTRUCTION, INCLUDING BACKUP DATA IN ACCORDANCE WITH ACI 301–99 CHAPTER 4, SECTION 4.2.3, EXCLUDING SECTION 4.2.3.4B, INDICATING WHERE CONCRETE IS TO PLACED WITHIN THE STRUCTURE.
   B) SUBMIT DETAILED SHOP DRAWINGS OF REINFORCING BARS SHOWING NUMBER, SIZE, AND LOCATION. INCLUDE BAR LISTS AND BEND DIAGRAMS.
27. STEP AND SLOPE ALL WALKWAYS AWAY FROM THE BUILDING.

MASONRY

1. MASONRY INSPECTION SHALL BE PROVIDED BY A QUALIFIED AGENT IN ACCORDANCE WITH ACI 530.1–1.6. INSPECTION SERVICES SHALL INCLUDE, BUT ARE NOT LIMITED TO, THE WORK IN PROGRESS AS WELL AS MATERIALS, EQUIPMENT, AND PROCEDURES.
2. HOLLOW LOAD BEARING UNITS SHALL CONFORM TO ASTM C90, NORMAL WEIGHT, TYPE II. MINIMUM NET COMPRESSIVE UNIT STRENGTH = 1900 PSI. (NET AREA COMPRESSIVE MASONRY STRENGTH F'M = 1500 PSI).
3. MORTAR SHALL BE TYPE M OR S AND CONFORM TO ASTM C270 (PROPORTION OR PROPERTY SPECIFICATION).
4. COARSE GROUT SHALL CONFORM TO ASTM C476:
   A) 3000 PSI AT 28 DAYS.
   B) 1/4" MAXIMUM AGGREGATE.
   C) 8" – 11" SLUMP.
5. CODES AND STANDARDS:
   ACI 530/ASCE 5 "BUILDING CODE REQUIREMENTS FOR MASONRY STRUCTURES"
   ACI 530.1/ASCE 6 "SPECIFICATIONS FOR MASONRY STRUCTURES"
6. PLACE ALL MASONRY IN RUNNING BOND WITH 3/8" MORTAR JOINTS. PROVIDE COMPLETE COVERAGE FACE SHELL MORTAR BEDDING, HORIZONTAL AND VERTICAL. FULLY MORTAR WEBS IN ALL COURSES OF PIERS, COLUMNS, AND PILASTERS AND ADJACENT TO GROUTED CELLS.
7. A REINFORCED CONCRETE TIE BEAM SHALL BE PROVIDED IN ALL WALLS SHOWN ON THE STRUCTURAL DRAWINGS AT THE ROOF AND AT TOP OF ANY PARAPET WALL. USE GALVANIZED MESH–TYPE CELL CAPS. PROVIDE CORNER BARS AT ALL BEAM CORNERS TO MATCH HORIZONTAL BARS.
8. UNLESS NOTED OTHERWISE, TIE BEAMS SHALL BE AS FOLLOWS:
   A) ROOF LEVEL: DOUBLE COURSE KNOCK–OUT BLOCKS WITH (1) #5 BAR IN EACH COURSE, FULLY GROUTED.
   B) TOP OF PARAPET: (1) #5 BAR IN GROUTED KNOCK–OUT BLOCKS.
9. VERTICAL BARS SHALL BE HELD IN POSITION AT THE TOP AND BOTTOM OF BAR AND AT 8'–0" O.C. MAXIMUM WITH A MINIMUM CLEARANCE OF 1/2" FROM MASONRY. THE CLEAR DISTANCE BETWEEN BARS SHALL NOT BE LESS THAN ONE BAR DIAMETER, NOR LESS THAN 1". CENTER BARS IN WALLS U.N.O.
10. VERTICAL REINFORCING SHALL BE AS SHOWN ON THE DRAWINGS. FILL CELLS WITH COARSE GROUT AS SPECIFIED. PROVIDE ACI 90 DEGREE STANDARD HOOKS INTO FOOTING AND ROOF TIE BEAM. LAP SPLICE VERTICAL REINFORCEMENT ABOVE FOOTING AND ABOVE EACH FLOOR LEVEL UNLESS NOTED OTHERWISE. MAINTAIN VERTICAL REINFORCING SHOWN ON PLANS ABOVE AND BELOW MASONRY OPENINGS EXCEEDING 10'–0" CLEAR. CONTINUE FOUNDATION DOWELS BELOW ALL MASONRY OPENINGS.
11. ALL REINFORCED FILL CELLS ARE TO BE CLEAN AND FREE OF ANY FOREIGN MATERIAL OR DEBRIS. REMOVE ANY FOREIGN MATERIAL FROM FILL CELLS, INCLUDING POLYSTYRENE INSULATING INSERTS, PRIOR TO GROUT POUR.
12. REINFORCING BARS SHALL BE STRAIGHT EXCEPT FOR BENDS AROUND CORNERS AND WHERE BENDS OR HOOKS ARE DETAILED ON THE PLANS.
13. WHEN A FOUNDATION DOWEL DOES NOT LINE UP WITH A VERTICAL CORE, IT SHALL NOT BE SLOPED MORE THAN ONE HORIZONTAL IN SIX VERTICALS. DOWELS SHALL BE GROUTED INTO A CORE IN VERTICAL ALIGNMENT, EVEN THOUGH IT IS IN AN ADJACENT CELL TO THE VERTICAL WALL REINFORCEMENT.
14. PROVIDE CONTINUOUS HORIZONTAL WALL REINFORCING 9 GA. GALVANIZED LADDER TYPE DUR–O–WALL (OR EQUIVALENT) AT 16" O.C.
15. PROVIDE HORIZONTAL JOINT REINFORCEMENT AT DOORS AND WINDOWS FOR FIRST AND SECOND BLOCK COURSE ABOVE AND BELOW APERTURES. RUN REINFORCING CONTINUOUS OR EXTEND TWO FEET FROM APERTURE EDGE.
16. WIRE REINFORCEMENT SHALL BE LAPPED AT LEAST 6" AT SPLICES AND SHALL CONTAIN AT LEAST ONE CROSS WIRE OF EACH PIECE OF REINFORCEMENT IN THE LAPPED DISTANCE.
17. CLEANOUTS SHALL BE PROVIDED IN THE BOTTOM COURSE OF MASONRY IN EACH GROUT POUR WHEN THE POUR HEIGHT EXCEEDS 5'. CLEANOUTS TO BE SAW–CUT 3" X 3".
18. GROUT POUR HEIGHT SHALL NOT EXCEED 24'.
19. CONSOLIDATE GROUT POURS AT THE TIME OF PLACEMENT BY MECHANICAL MEANS AND RECONSOLIDATE AFTER INITIAL WATER LOSS AND SETTLEMENT.
20. SUBMITTALS:
   A) SUBMIT PROPOSED GROUT MIX DESIGN PRIOR TO CONSTRUCTION.
   B) SUBMIT PROPOSED MORTAR MIX DESIGN PRIOR TO CONSTRUCTION.
   C) SUBMIT DETAILED SHOP DRAWINGS OF REINFORCING BARS SHOWING NUMBER, SIZE, AND LOCATION. INCLUDE BAR LISTS AND BEND DIAGRAMS.
   D) SUBMIT COMPRESSIVE STRENGTH TESTS OF PROPOSED MASONRY UNITS PRIOR TO CONSTRUCTION. MASONRY UNITS ARE TO BE TESTED IN ACCORDANCE WITH ASTM C140.
21. A QUALIFIED TESTING LABORATORY SHALL BE RETAINED TO PERFORM THE FOLLOWING TESTS:
   A) SAMPLE AND TEST GROUT IN ACCORDANCE WITH ASTM C1019 FOR EACH 5000 SQ. FT. OF MASONRY.
   B) SLUMP TESTS – ASTM C143.
22. PROVIDE 8" DEEP PRECAST REINFORCED CONCRETE LINTELS OVER ALL MASONRY OPENINGS NOT SHOWN TO HAVE A STRUCTURAL BEAM. MINIMUM END BEARING = 8". LINTEL WIDTH TO MATCH MASONRY WIDTH.

STRUCTURAL STEEL

1. STRUCTURAL STEEL SHALL CONFORM TO THE AISC "SPECIFICATION FOR THE DESIGN, FABRICATION AND ERECTION OF STRUCTURAL STEEL FOR BUILDINGS", LATEST EDITION, EXCEPT CHAPTER 4.2.1, CODE OF STANDARD PRACTICE.
2. WELDED CONNECTIONS SHALL CONFORM TO THE LATEST REVISED CODE OF THE AMERICAN WELDING SOCIETY, AWS D1.1. ALL WELDING SHALL BE PERFORMED USING E70XX, LOW HYDROGEN ELECTRODES, U.N.O. ELECTRODES ARE TO BE PROTECTED FROM MOISTURE.
3. ALL CONNECTIONS TO BE DOUBLE ANGLE FRAMED BEAM CONNECTION PER AISC UNLESS NOTED OTHERWISE. ALL BOLTS TO BE 3/4" DIAMETER UNLESS NOTED OTHERWISE. SHOP CONNECTIONS MAY BE WELDED OR BOLTED. WELDS ARE TO BE EQUAL IN STRENGTH TO BOLTS. ALL FIELD CONNECTIONS ARE TO BE BOLTED WITH ASTM A325N OR A490 BOLTS (BEARING TYPE BOLTS WITH THREADS IN THE SHEAR PLANE) INCLUDING SUITABLE NUTS AND PLAIN HARDENED WASHERS. ALL BOLTS SHALL BE TIGHTENED SNUG TIGHT UNLESS OTHERWISE NOTED. DESIGN CONNECTIONS FOR THE LARGER OF EITHER THE SHEAR SHOWN ON THE DRAWINGS, (INDICATED AS "V =K" AT ENDS OF MEMBER) OR 55% OF THE MAXIMUM SHEAR (V IN KIPS) LISTED IN THE TABLES FOR "ALLOWABLE UNIFORM LOADS IN KIPS FOR BEAMS LATERALLY SUPPORTED" AT THE BOTTOM OF EACH PAGE IN THE "PROPERTIES AND REACTION VALUES", PART 2 OF THE LATEST EDITION OF THE AISC "MANUAL OF STEEL CONSTRUCTION".
4. SIZE AND USE OF HOLES: SEE AISC TABLE J3.3 U.N.O.
   A) OVERSIZED OR LONG–SLOTTED HOLES ARE NOT PERMITTED U.N.O. MAXIMUM HOLE DIAMETER = BOLT DIAMETER + 1/16".
   B) LARGER HOLES ARE PERMITTED IN STANDARD COLUMN BASE PLATES. MAXIMUM HOLE DIAMETER = BOLT DIAMETER + 3/8". HARDENED WASHERS, TO COVER THE LARGER HOLE, SHALL BE PROVIDED.
   C) LARGER HOLES ARE NOT PERMITTED IN WIND FRAME COLUMN BASE PLATES. MAXIMUM HOLE DIAMETER = BOLT DIAMETER + 1/16".
   D) SLOTTED HOLES: A PLATE WASHER OR A CONTINUOUS BAR WITH STANDARD HOLES, HAVING A SIZE SUFFICIENT TO COMPLETELY COVER THE SLOT AFTER INSTALLATION, AND A MIN. OF 5/16" THICK SHALL BE PROVIDED. TACK WELD NUT TO BOLT AFTER ERECTION.
5. ALL STEEL BEAMS SHALL BE FABRICATED WITH THE NATURAL CAMBER (WITHIN THE MILL TOLERANCE) LOCATED ABOVE THE HORIZONTAL CENTERLINE BETWEEN THE END CONNECTIONS.
6. VERIFY THE EXACT SIZE AND LOCATION OF ALL FLOOR AND ROOF OPENINGS FOR MECHANICAL EQUIPMENT WITH THE MECHANICAL CONTRACTOR PRIOR TO FABRICATION OF MATERIALS.
7. SHOP PAINT – METAL ALKYD–OIL PRIMER, ANY OF THE FOLLOWING: SEE ARCHITECT FOR PREFERRED COLOR.

MANUFACTURER	DESIGNATION
PORTER	NO. 298
MOBILE	NO. 13F812
TINEMEC	NO. 1009
AMERON	NO. 5102 AMERCOAT

   SHOP PAINT ALL SURFACES OF STEEL EXCEPT ANCHOR BOLTS AND SURFACES TO BE FIELD WELDED. APPLY PAINT IN ACCORDANCE WITH SSPC–PA1, SHOP FIELD AND MAINTENANCE PAINTING. APPLY PAINT IN SUFFICIENT VOLUME OR COATS TO PROVIDE A MINIMUM DRY FILM THICKNESS OF AT LEAST 3 MILS BUT NOT MORE THAN 5 MILS.
8. SURFACE PREPARATION – PREPARE STEEL SURFACE IN ACCORDANCE WITH SSPC–SP3 POWER TOOL CLEANING. ANY METHOD IN CONFORMANCE WITH AN SSPC SPECIFICATION OF HIGHER QUALITY THAN LISTED WILL BE ACCEPTABLE. AT OPTION OF CONTRACTOR, WHEELABRATOR MAY BE USED FOR PREPARATION OF STEEL SURFACES, PROVIDING RESULTANT SURFACE IS EQUAL IN ALL RESPECTS TO THOSE REQUIRED.
9. A QUALIFIED TESTING LABORATORY SHALL BE RETAINED TO PERFORM THE FOLLOWING TESTS.
   A) VISUALLY INSPECT ALL STEEL MEMBERS AND CONNECTIONS.
   B) TEST 50 PERCENT OF FULL PENETRATION WELDS.
10. ONE COPY OF ALL TEST REPORTS SHALL BE SENT DIRECTLY TO OWNER, ARCHITECT, STRUCTURAL ENGINEER, AND GENERAL CONTRACTOR.
11. STRUCTURAL STEEL SHAPES, TEES – ASTM A992.
12. STRUCTURAL STEEL ANGLES, CHANNELS, PLATES, BARS – ASTM A36.
13. STRUCTURAL STEEL TUBING – ASTM A500 GRADE C.
14. STEEL PIPE – ASTM A53 GRADE B.
15. ANCHOR BOLTS – F1554 GRADE 36.
16. OPENINGS THROUGH STEEL BEAMS SHALL BE PROVIDED AS DETAILED ON THE DRAWINGS. ALL SUCH OPENINGS SHALL BE MACHINE CUT IN THE SHOP. ALL RECTANGULAR OPENINGS SHALL HAVE A CORNER RADIUS OF 2 TIMES THE WEB THICKNESS, 1/2" MINIMUM.
17. COLUMN SPLICES SHALL BE DESIGNED IN ACCORDANCE WITH TABLE A–7, PAGE 11–A12 OF THE AISC "STRUCTURAL STEEL DETAILING" MANUAL.
18. NO SPLICES SHALL BE PERMITTED IN ANY STRUCTURAL STEEL MEMBER UNLESS SHOWN ON APPROVED SHOP DRAWINGS.
19. SUBMITTALS: CONTRACTOR SHALL SUBMIT DETAILED SHOP DRAWINGS SHOWING ALL STRUCTURAL STEEL LAYOUTS AND DETAILS, SIZES OF MEMBERS, TYPE OF STEEL, CONNECTION DETAILS, WELDS, BOLTS, ETC., AS REQUIRED TO FABRICATE AND ERECT ALL STRUCTURAL STEEL FRAMING. ALL CONNECTIONS NOT SHOWN ON THE STRUCTURAL DRAWINGS SHALL BE BY THE DETAILER AND SUBMITTED ON SHOP DRAWINGS, SIGNED AND SEALED BY A REGISTERED FLORIDA ENGINEER. STEEL STAIRS SHALL ALSO BE SUBMITTED ON SEALED DRAWINGS.
20. NON–SHRINK GROUT SHALL BE: NONMETALLIC SHRINKAGE–RESISTANT GROUT, PREMIXED, NONMETALLIC, NONCORROSIVE, NONSTAINING PRODUCT CONTAINING SELECTED SILICA SANDS, PORTLAND CEMENT, SHRINKAGE COMPENSATING AGENTS, PLASTICIZING AND WATER–REDUCING AGENTS, COMPLYING WITH CE–CRD–C621.
21. NO FIELD WELDING OF GALVANIZED MEMBERS IS PERMITTED.
22. ERECTION
   A) BEFORE ERECTION, THE CONTRACTOR IS TO REMOVE ALL MUD, DIRT OR OTHER FOREIGN MATTER, WHICH ACCUMULATES DURING HANDLING AND STORAGE.
   B) DRIFTING TO ENLARGE UNFAIR HOLES WILL NOT BE PERMITTED. DRILL SUCH HOLES TO ACCOMMODATE THE NEXT LARGER SIZE FASTENER, WHERE POSSIBLE.
   C) AFTER ERECTION, CLEAN FIELD WELDS, BOLTED CONNECTIONS, AND ABRADED AREAS WHERE SHOP COAT HAS BEEN DAMAGED. SPOT AND PRIME AREAS USING SAME MATERIAL AS SHOP COAT.
   D) SET ALL MEMBERS SO THAT, IN THEIR FINAL LOCATION, LEVEL, PLUMBNESS AND ALIGNMENT ARE WITHIN THE TOLERANCES PRESCRIBED BY AISC CODE.

POST INSTALLED ANCHORS

1. ADHESIVE ANCHORAGES, WHERE SPECIFIED ON THE DRAWINGS, SHALL CONFORM TO THE FOLLOWING –
   CONCRETE ADHESIVE ANCHORS:
   HILTI HIT–RE 500–V3 ESR–3814
   HILTI HIT–HY270
2. DRILLING SHALL BE PERFORMED WITH A ROTARY HAMMER DRILL AND CARBIDE TIPPED DRILL BIT IN ACCORDANCE WITH THE MANUFACTURER'S INSTRUCTIONS AND THE APPLICABLE ICC EVALUATION REPORT.
3. BORE HOLE CLEANING PROCEDURES MUST COMPLY WITH THE MANUFACTURER'S INSTRUCTIONS AND THE APPLICABLE ICC EVALUATION REPORT IN ORDER TO PRODUCE A DRY, DUST–FREE HOLE.
4. INJECTION OF ADHESIVE SHALL BE PERFORMED IN ACCORDANCE WITH MANUFACTURER'S INSTRUCTIONS AND THE APPLICABLE ICC EVALUATION REPORT IN ORDER TO PRODUCE AN AIR–VOID FREE INJECTION.
5. SPECIAL CONDITIONS SUCH AS WATER SATURATED CONCRETE, WATER–FILLED HOLES, UNDERWATER AND OVERHEAD INSTALLATIONS MUST BE APPROVED BY THE ENGINEER OF RECORD AND COMPLY WITH THE APPLICABLE ICC–ES REPORT.
6. STEEL ANCHORING ELEMENTS SHALL BE THE SIZE AND GRADE SHOWN ON THE DRAWINGS AND MUST BE CLEAN, DRY AND FREE OF ANY OIL OR CONTAMINANTS.
7. SUBSTITUTIONS FOR ANCHOR SYSTEMS MUST BE APPROVED BY THE STRUCTURAL ENGINEER OF RECORD PRIOR TO INSTALLATION AND SHALL HAVE A VALID ICC–ES EVALUATION IN ACCORDANCE WITH THE APPLICABLE BUILDING CODE.
8. ALL ANCHOR EMBED DEPTHS SPECIFIED ON THESE DRAWINGS ARE EFFECTIVE EMBEDMENT DEPTHS. ADDITIONAL ANCHOR LENGTH AND OR HOLE DEPTH SHALL BE PROVIDED AS REQUIRED BY THE ANCHOR MANUFACTURER AND ASSOCIATED CODE APPROVALS.

METAL DECKING

1. ALL METAL DECK SHALL CONFORM TO THE REQUIREMENTS OF THE STEEL DECK INSTITUTE.
2. METAL ROOF DECK SHALL BE 1 1/2" DEEP, 22 GA., WIDE RIB TYPE B AND GALVANIZED.
3. MINIMUM FASTENING OF ROOF DECK WITH (5) 5/8" DIA. PUDDLE WELDS AT EACH SUPPORT PER 36" WIDTH AND (4) #10 TEK SCREW AT MIDSPAN OF SIDELAPS. SEE PLANS FOR ADDITIONAL FASTENING.
4. MINIMUM FASTENING AT BUILDING PERIMETER OF DECK SHALL BE 5/8" DIAMETER PUDDLE WELDS AT 6" O.C.
5. INSTALL ALL DECKING 3 SPAN CONTINUOUS.
6. USE WELD WASHERS FOR ALL DECKING 24 GA. AND THINNER.
7. DO NOT HANG OR ATTACH DUCTWORK, CONDUIT, PIPING, EQUIPMENT, CEILINGS, ETC. FROM METAL DECKING.
8. ALL ROOF DECK OPENINGS GREATER THAN 10" DIAMETER ARE TO HAVE SUPPORT ANGLES PER TYPICAL DECK OPENING DETAIL, INCLUDING OPENINGS FOR ROOF SUMP PANS.
9. SUBMITTALS: CONTRACTOR SHALL SUBMIT DETAILED SHOP DRAWINGS SHOWING LAYOUT OF DECK, TYPE OF DECK, ALL CONNECTIONS INCLUDING END WELDS, SEAM WELDS, INTERMEDIATE WELDS, AND ALL ACCESSORY MATERIAL SUCH AS CLOSURES, SUMPS FOR DRAINS, ETC.
10. A QUALIFIED TESTING LABORATORY SHALL BE RETAINED TO VISUALLY INSPECT ALL DECK WELDS AND FASTENERS.

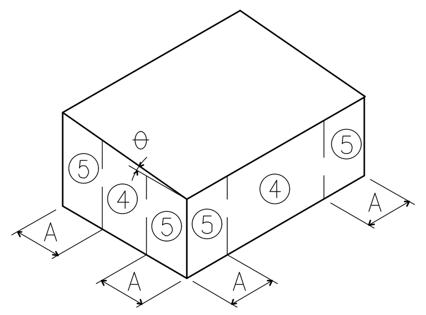

WALL PRESSURE ZONES
(ISOMETRIC VIEW)

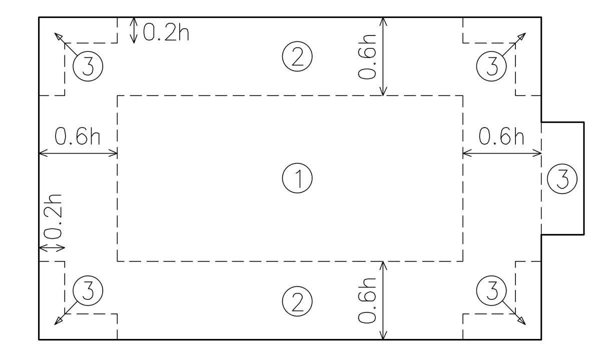

ROOF PRESSURE ZONES
(PLAN VIEW)

BUILDING DATA

ULTIMATE WIND SPEED (mph): (FIGURE 1609)	132	INTERNAL PRESSURE COEFFICIENT: (Enclosed Building per ASCE 7–22)	+/– 0.18
WIND LOAD FACTOR:	0.6	WIND EXPOSURE CATEGORY:	C
RISK CATEGORY: (TABLE 1604.5)	II	WIDTH OF WALL EDGE STRIP (A):	4.3
ROOF ANGLE (θ): (Degrees)	A<7.0	DEAD LOAD RESISTING UPLIFT (0.6D in psf):	10.0
MEAN ROOF HEIGHT (h):	16'–0"	EDGE DISTANCE (0.6h) 0.6 X MEAN ROOF HEIGHT (Feet)	9.6
		EDGE DISTANCE (0.2h) 0.2 X MEAN ROOF HEIGHT (Feet)	3.2

DESIGN WIND LOADS – COMPONENTS & CLADDING (Values per ASD)

ROOF					WALL			
ZONE	AREA (sf)	DESIGN PRESSURE (psf)			ZONE	AREA (sf)	DESIGN PRESSURE (psf)	
		Positive	Negative	Net Uplift			Positive	Negative
1	10.0	10.00	–36.84	–26.84	4	10.0	21.17	–22.93
1	50.0	10.00	–31.20	–21.20	4	50.0	18.99	–20.75
1	100.0	10.00	–28.77	–18.77	4	100.0	18.05	–19.82
2	10.0	10.00	–48.60	–38.60	5	10.0	21.17	–28.22
2	50.0	10.00	–41.35	–31.35	5	50.0	18.99	–23.87
2	100.0	10.00	–38.22	–28.22	5	100.0	18.05	–21.99
3	10.0	10.00	–66.24	–56.24				
3	50.0	10.00	–51.73	–41.73				
3	100.0	10.00	–45.48	–35.48				

NOTES:
1. FOR EFFECTIVE AREAS BETWEEN THOSE GIVEN ABOVE THE LOAD MAY BE INTERPOLATED, OTHERWISE USE THE LOAD ASSOCIATED WITH THE LOWER EFFECTIVE AREA.
2. PLUS AND MINUS SIGNS SIGNIFY PRESSURES ACTING TOWARD AND AWAY FROM THE BUILDING SURFACES, RESPECTIVELY.
3. SEE PRESSURE ZONE DIAGRAMS FOR CORRESPONDING ZONES.
4. EXTERIOR GLAZING OPENINGS IN BUILDINGS SHALL COMPLY WITH FLORIDA BUILDING CODE 8TH EDITION (2023) BY EITHER BEING DESIGNED FOR IMPACT RESISTANCE OR BEING PROTECTED BY IMPACT PROTECTIVE SYSTEMS WHEN ULTIMATE WIND SPEED IS 140 MPH OR MORE.

1 DESIGN WIND CRITERIA (ASD VALUES)
NOT TO SCALE

SHEET INDEX

SHEET NUMBER	SHEET TITLE
S0.1	STRUCTURAL NOTES
S1.1	FOUNDATION PLAN
S2.1	ROOF FRAMING PLAN
S3.1	WALL SECTIONS
S4.1	SECTIONS AND DETAILS
S4.2	SECTIONS AND DETAILS
S4.3	SECTIONS AND DETAILS

ACG PROFESSIONAL ENGINEERING, INC.
16912 Melissa Ann Dr. . Lutz, FL . 33558
Ph: 813.963.1906 STRUCTURAL
Alan C. Guenther, P.E. #53308 / C.A. #26813

FWH Architects
3336 Grand Blvd. Suite 201
Holiday, Florida 34690
Ph. 727. 815. 3336
Fax 727. 815. 3337

TO THE BEST OF THE KNOWLEDGE OF THE ARCHITECTS AND ENGINEERS, SAID PLANS AND SPECIFICATIONS COMPLY WITH THE APPLICABLE MINIMUM BUILDING CODES AND THE APPLICABLE MINIMUM FIRE SAFETY STANDARDS

Alan C Guenther, PE
FL PE #53308

no.	date	revision descriptions

STARBUCKS
SHELL CONSTRUCTION
1990 STATE ROAD 19
TAVARES, FL

03.25.2024
date

24007
comm. no.

STRUCTURAL NOTES

S0.1

PLOT DATE: 3.22.2024

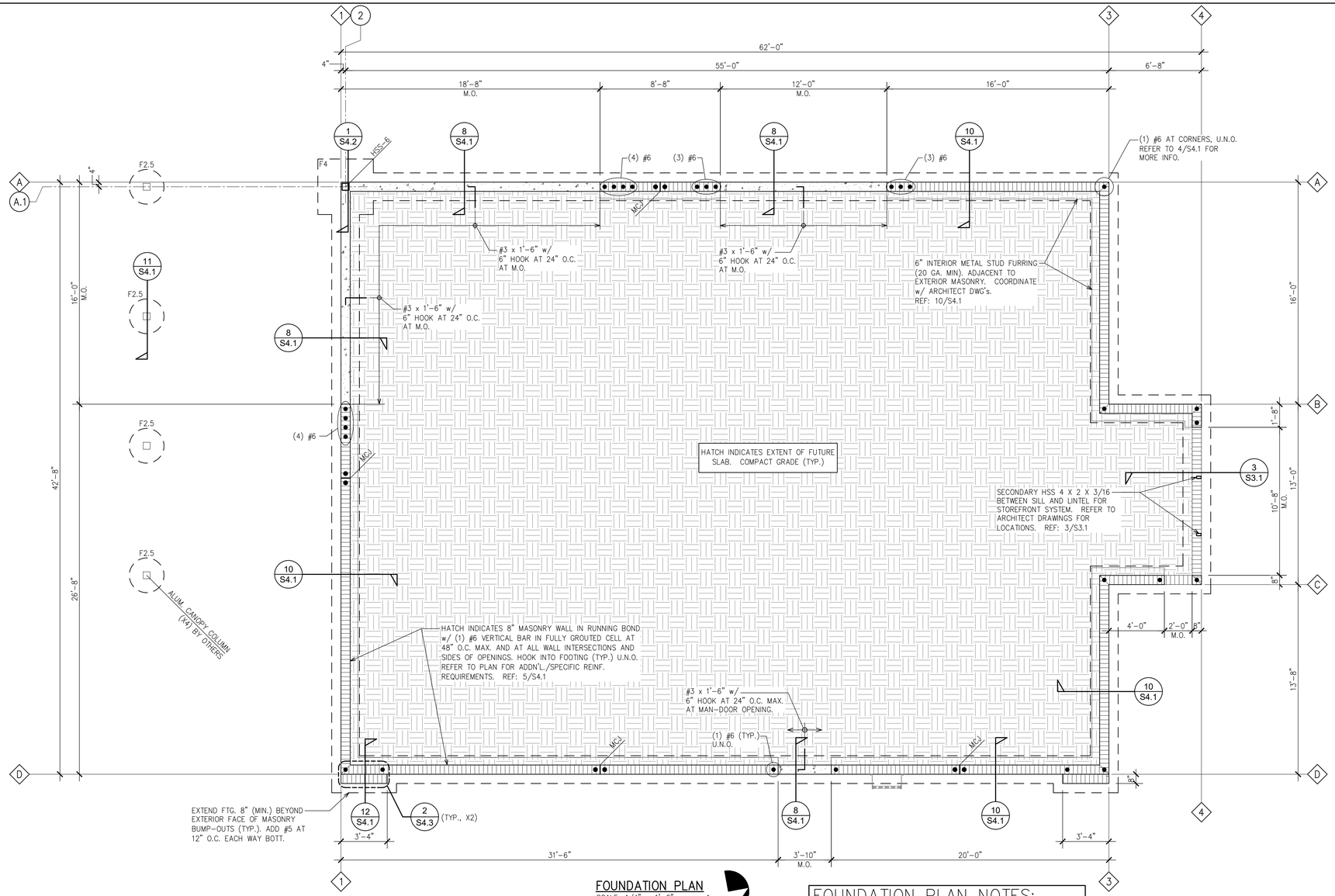

FOUNDATION PLAN

SCALE: 1/4" = 1'-0"

NORTH

FOOTING SCHEDULE

MARK	SIZE	DEPTH	REINFORCING	COMMENTS
WF2	2'-0" WIDE X CONT.	1'-0"	(3) #5 CONT. W/ #5 TRANSV. AT 24" O.C. BOTTOM	WALL FOOTING
F2.5	2'-6" DIAMETER	5'-0"	(5) #6 VERTICAL W/ #3 TIES AT 12" O.C.	CANOPY FOOTING
F4	4'-0" X 4'-0"	1'-0"	(4) #5 EACH WAY, BOTTOM	COLUMN FOOTING

STEEL COLUMN SCHEDULE

MARK	COLUMN SIZE	BASE PLATE	BASE PLATE TYPE	COMMENTS
HSS-4	HSS 4 X 4 X 1/4	–	–	ROOF STUB COLUMN AT MECH. SCREEN WALL
HSS-6	HSS 6 X 6 X 1/4	3/4 X 12 X 12	TYPE A	(4) 3/4"ø X 12" F1554-GR36 ANCHOR BOLTS

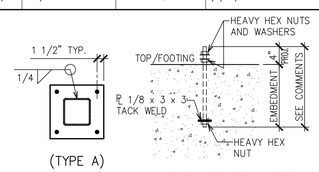

FOUNDATION PLAN NOTES:

1. FUTURE SLAB-ON-GRADE TO BE 4" THICK (3,000 PSI) WITH 6x6 – W1.4xW1.4 W.W.F. ON 15 MIL VAPOR RETARDER OVER COMPACTED AND TERMITE TREATED SOIL. SLAB TO BE LEVEL (1/64" PER FOOT OR LESS), SMOOTH, CLEAN AND WITH SEALED CONTROL JOINTS. INSTALL FUTURE SLAB CONTROL JOINTS AT ≤15'-0" O.C. EACH WAY. JOINT PATTERN SHALL BE APPROXIMATELY SQUARE, AND LIMITED TO AN AREA NOT EXCEEDING 255 SQUARE FEET. REFER TO 1/S4.1 FOR CONTROL JOINT DETAIL.
2. TOP OF SLAB ELEVATION = 0'-0" U.N.O.
   TOP OF EXTERIOR FOOTING ELEVATION = (–) 1'-4" U.N.O.
3. CENTER ALL FOOTINGS BELOW WALL OR COLUMN U.N.O.
4. ALL FOOTING REINFORCING TO BE BOTTOM BARS U.N.O.
5. REFER TO ARCHITECTURAL/CIVIL FOR EXTERIOR SLABS, PAVERS, AND SIDEWALK INFORMATION.
6. REFER TO ARCHITECTURAL/PLUMBING DRAWINGS FOR FIXTURE/DRAIN LOCATIONS AND REQUIREMENTS.
7. REFER TO ARCHITECT DRAWINGS FOR ADDITIONAL DIMENSIONS NOT SHOWN.
8. REFER TO THIS PLAN FOR MASONRY CONTROL JOINT (M.C.J.) LOCATIONS. REFER TO 3/S4.1 FOR MASONRY CONTROL JOINT DETAIL.
9. ALL WALL FOOTINGS TO BE TYPE "WF2" U.N.O.
10. REFER TO 7/S4.1 FOR PIPE PENETRATION DETAIL.
11. PROVIDE CORNER BARS AT ALL CORNERS AND INTERSECTIONS OF CONTINUOUS FOOTINGS. REFER TO DETAIL 2/S4.1 FOR MORE INFO.
12. REFER TO 1/S0.1 FOR DESIGN WIND CRITERIA.
13. REFER TO CIVIL DRAWINGS FOR LOCATION AND ORIENTATION OF THE BUILDING ON THE SITE.

FWH Architects
3336 Grand Blvd. Suite 201
Holiday, Florida 34690
Ph. 727. 815. 3336
Fax 727. 815. 3337

TO THE BEST OF THE KNOWLEDGE OF THE ARCHITECTS AND ENGINEERS, SAID PLANS AND SPECIFICATIONS COMPLY WITH THE APPLICABLE MINIMUM BUILDING CODES AND THE APPLICABLE MINIMUM FIRE SAFETY STANDARDS

Alan C Guenther, PE
FL PE #53308

no.	date	revision descriptions

STARBUCKS
SHELL CONSTRUCTION

1990 STATE ROAD 19
TAVARES, FL

03.25.2024
date

24007
comm. no.

FOUNDATION PLAN

S1.1

ACG PROFESSIONAL ENGINEERING, INC.
16912 Melissa Ann Dr. Lutz, FL 33558
Ph: 813.963.1906 STRUCTURAL
Alan C. Guenther, P.E. #53308 / C.A. #26813

PLOT DATE: 3.22.2024

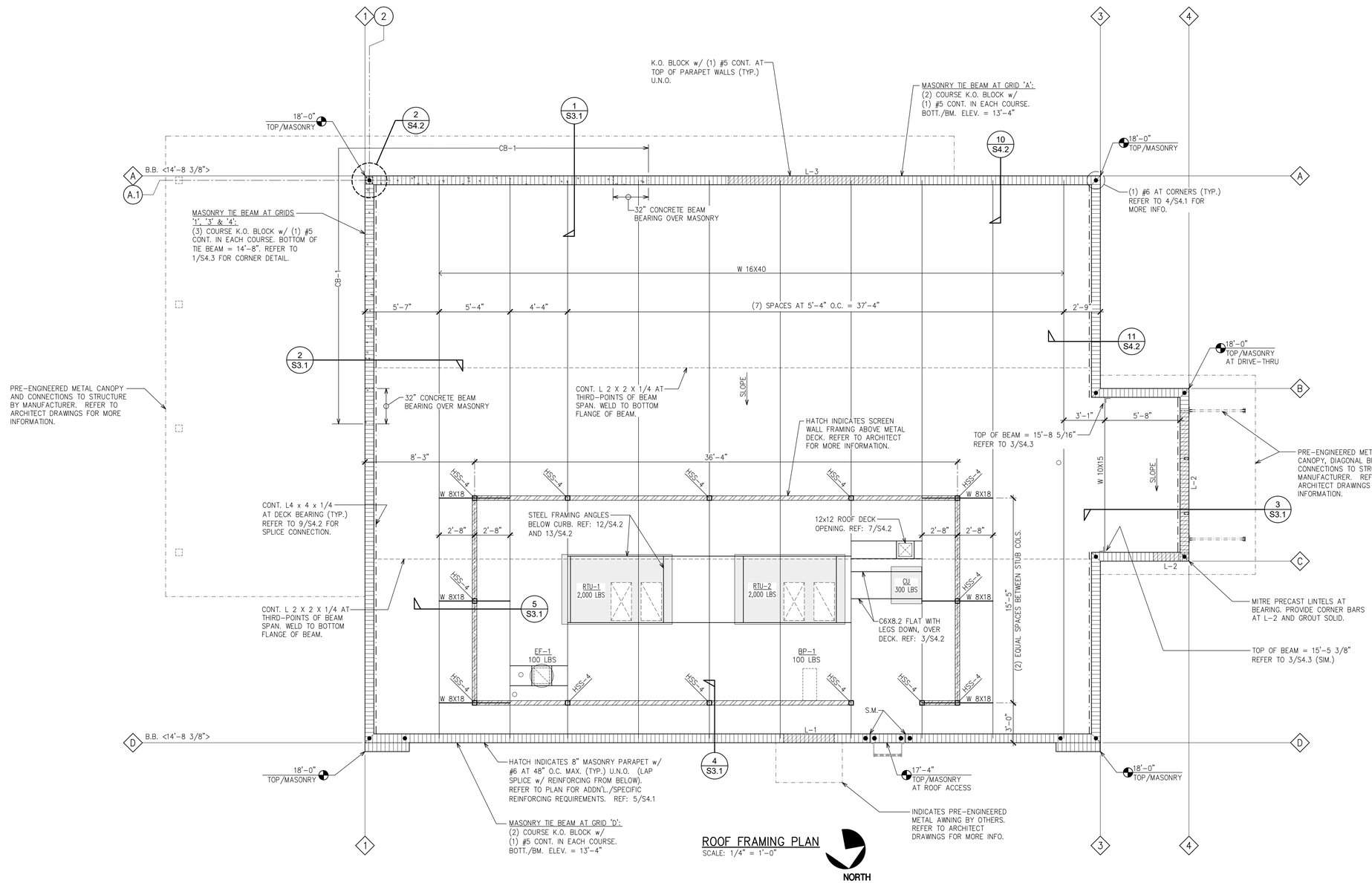

ROOF FRAMING PLAN

SCALE: 1/4" = 1'-0"

CONCRETE LINTEL SCHEDULE

MARK	SIZE	REINFORCING BARS	COMMENTS
L-1	8" X 8"	(1) #5 CONT.	TYPE A
L-2	8" X 16"	(2) #5 CONT.	TYPE B (6'-8 3/8")
L-3	8" X 24"	(3) #5 CONT.	TYPE C (10'-0 3/8")

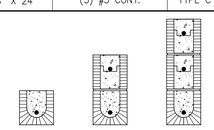

(TYPE A) (TYPE B) (TYPE C)

NOTES:

1. REFER TO 6/S4.1 FOR ADDITIONAL PRECAST LINTEL REQUIREMENTS.
2. ALL LINTELS AND KNOCK-OUT BLOCKS TO BE GROUTED SOLID.
3. (X'-X") INDICATES BOTTOM OF PRECAST LINTEL ELEVATION.

CONCRETE BEAM SCHEDULE

MARK	SIZE	REINFORCING		COMMENTS
		CONT. BARS	STIRRUPS	
CB-1	8" X 24"	(4) #6 BOTTOM (2) #6 MID AND TOP	#3 AT 10" O.C.	TYPE A (BOTT./BM. = 10'-0")

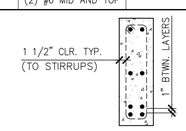

(TYPE A)

NOTES:

1. REFER TO 5/S4.2 FOR TYPICAL CONCRETE BEAM REINFORCING DETAIL.
2. BEAM DEPTHS MAY BE INCREASED AS REQUIRED FOR MASONRY COURSING. COORDINATE WITH ARCHITECTURAL REQUIREMENTS.

ROOF FRAMING PLAN NOTES:

1. METAL ROOF DECK AT MAIN BUILDING SHALL BE 1 1/2" DEEP, 22 GA., GALVANIZED (G60), TYPE "B". FASTEN ROOF DECK w/ (5) 5/8" DIAMETER PUDDLE WELDS AT EACH SUPPORT AND (4) #10 TEK SCREW SIDELAP FASTENERS EQUALLY SPACED BETWEEN SUPPORTS. REFER TO 4/S4.2
2. BEAM SPACING = SEE PLAN
3. ROOF SLOPE = 1/4" PER FOOT (MIN.) U.N.O.
4. CONTRACTOR TO COORDINATE SIZE, WEIGHT, AND LOCATION OF MECHANICAL EQUIPMENT AND PENETRATIONS WITH MECHANICAL EQUIPMENT SHOP DRAWINGS PRIOR TO BEAM FABRICATION. REFER TO DETAILS 12/S4.2 AND 13/S4.2
5. MECHANICAL CONTRACTOR SHALL VERIFY THAT WEIGHT OF ACTUAL EQUIPMENT INSTALLED DOES NOT EXCEED MAXIMUM OPERATING WEIGHT OF EQUIPMENT SHOWN ON PLAN.
6. B.B. < > = BEAM BEARING ELEVATION U.N.O. REFER TO PLAN.
7. S.M. = INDICATES STEP TOP/MASONRY PARAPET.
8. REFER TO 1/S0.1 FOR DESIGN WIND CRITERIA.

ACG
PROFESSIONAL ENGINEERING, INC.
16912 Melissa Ann Dr , Lutz, FL , 33558
Ph: 813.963.1906 STRUCTURAL
Alan C. Guenther, P.E. #53308 / C.A. #26813

PLOT DATE: 3.22.2024

FWH Architects
3336 Grand Blvd. Suite 201
Holiday, Florida 34690
Ph. 727. 815. 3336
Fax 727. 815. 3337

TO THE BEST OF THE KNOWLEDGE OF THE ARCHITECTS AND ENGINEERS, SAID PLANS AND SPECIFICATIONS COMPLY WITH THE APPLICABLE MINIMUM BUILDING CODES AND THE APPLICABLE MINIMUM FIRE SAFETY STANDARDS

Alan C Guenther, PE
FL PE #53308

no.	date	revision descriptions

STARBUCKS
SHELL CONSTRUCTION
1990 STATE ROAD 19
TAVARES, FL

03.25.2024
date

24007
comm. no.

ROOF FRAMING PLAN

S2.1

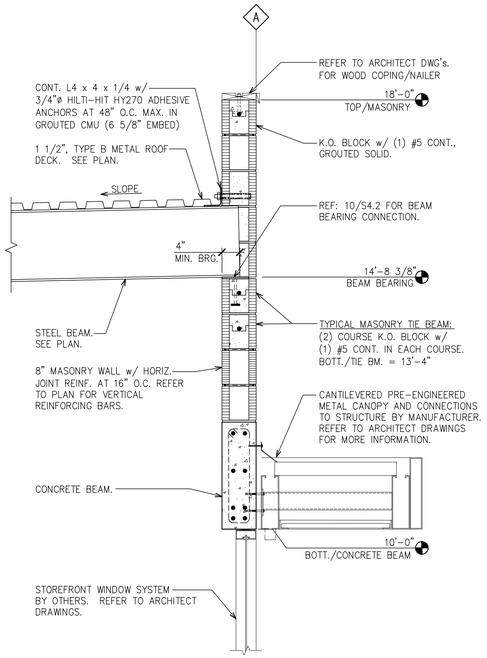

1 SECTION
SCALE: 3/4" = 1'-0"

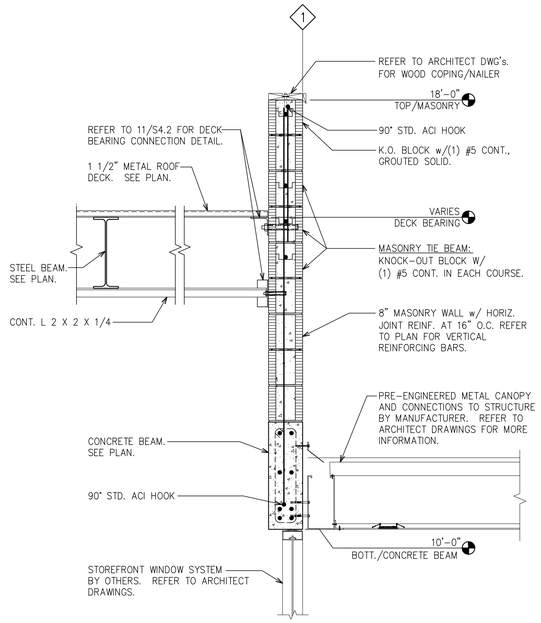

2 SECTION
SCALE: 3/4" = 1'-0"

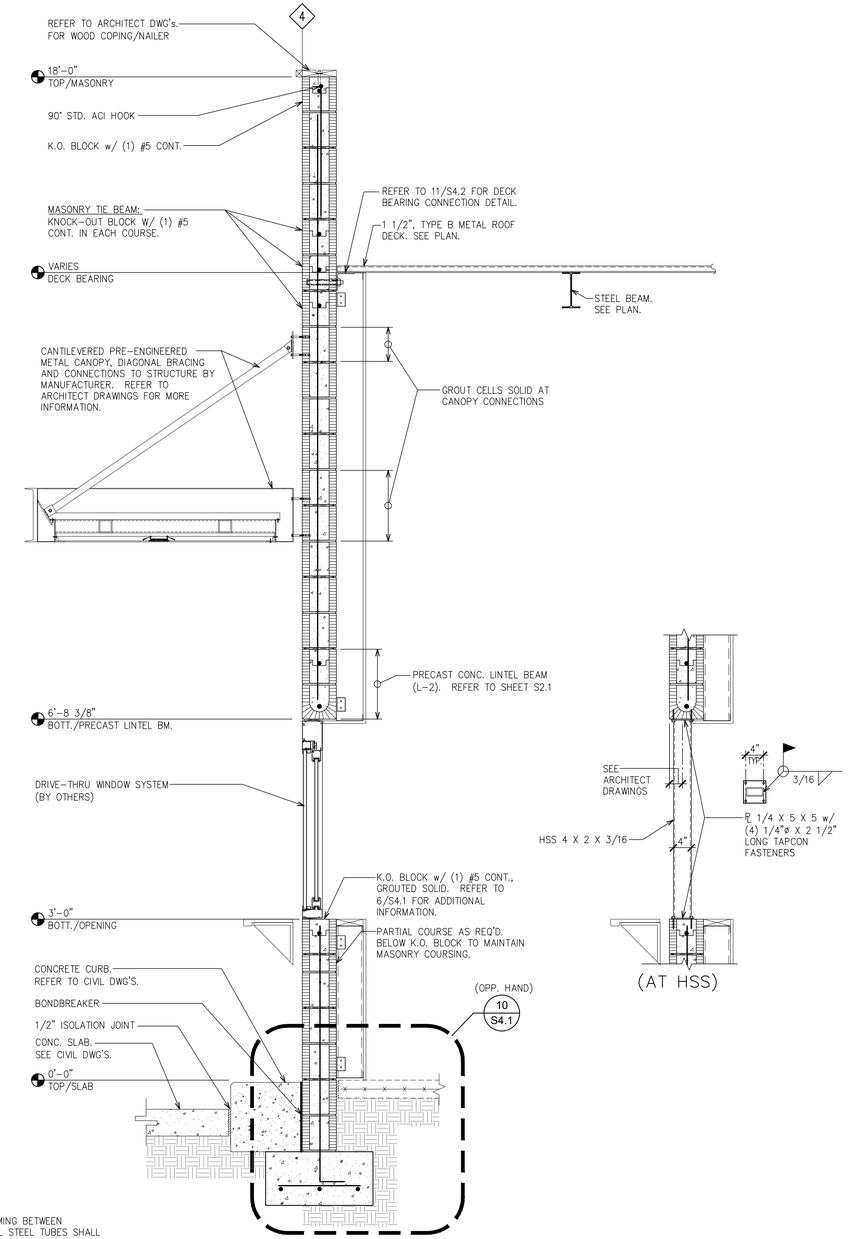

3 WALL SECTION
SCALE: 3/4" = 1'-0"

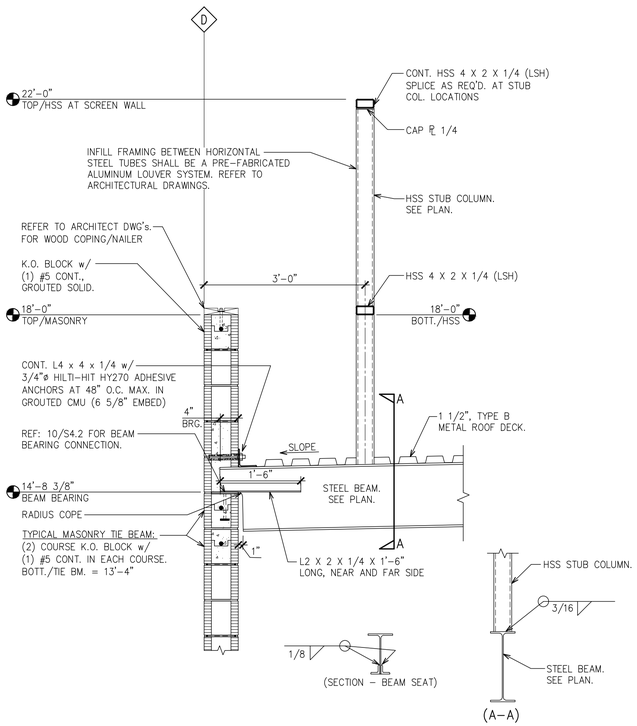

4 WALL SECTION
SCALE: 3/4" = 1'-0"

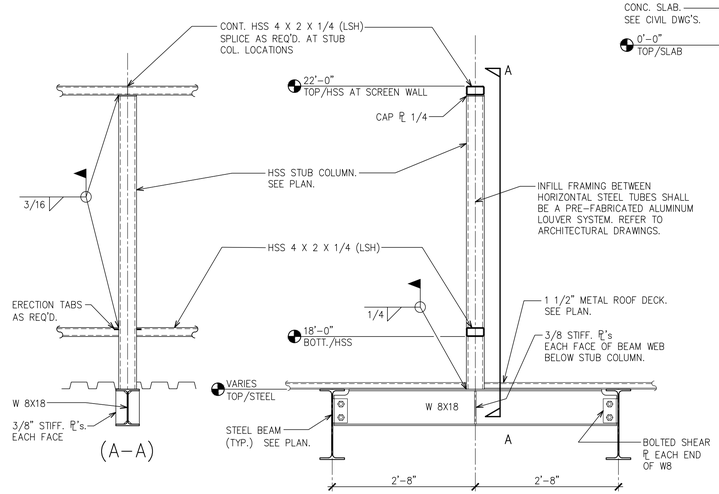

5 SECTION
SCALE: 3/4" = 1'-0"

FWH Architects
3336 Grand Blvd. Suite 201
Holiday, Florida 34690
Ph. 727. 815. 3336
Fax 727. 815. 3337

TO THE BEST OF THE KNOWLEDGE OF THE ARCHITECTS AND ENGINEERS, SAID PLANS AND SPECIFICATIONS COMPLY WITH THE APPLICABLE MINIMUM BUILDING CODES AND THE APPLICABLE MINIMUM FIRE SAFETY STANDARDS

Alan C Guenther, PE
FL PE #53308

no.	date	revision descriptions

STARBUCKS
SHELL CONSTRUCTION
1990 STATE ROAD 19
TAVARES, FL

03.25.2024
date

24007
comm. no.

WALL SECTIONS

S3.1

ACG PROFESSIONAL ENGINEERING, INC.
14912 Melissa Ann Dr. , Lutz, FL 33558
Ph: 813.963.1906 STRUCTURAL
Alan C. Guenther, P.E. #53308 / C.A. #26813

PLOT DATE: 3.22.2024

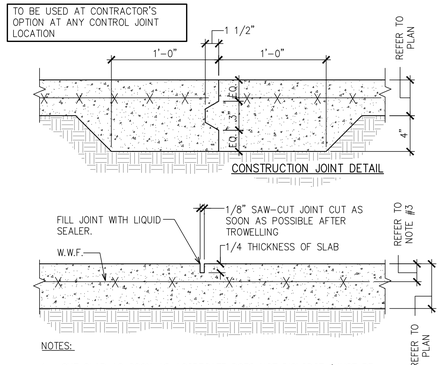

NOTES:

1. CUT SLAB AS SOON AS AGGREGATE DOES NOT DISLODGE (MUST BE WITHIN 12 HOURS OF CONCRETE PLACEMENT).
2. HAND TOOL JOINT TO FACE OF WALL WHERE SAW DOES NOT REACH.
3. PLACE REINFORCING AT MID-DEPTH FOR SLABS LESS THAN 5" THICK. PLACE REINFORCING 1/3 SLAB DEPTH (FROM TOP) FOR SLABS 5" THICK OR GREATER.

CONTROL JOINT DETAIL

1 FUTURE CONTROL AND CONSTRUCTION JOINT

SCALE: 1 1/2" = 1'-0"

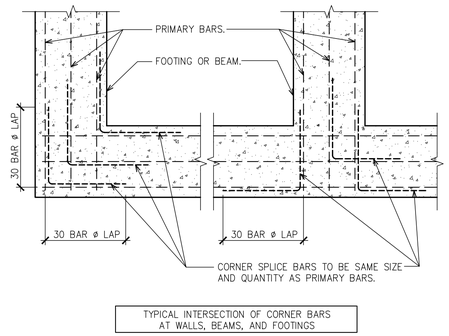

2 CORNER BAR DETAIL

NOT TO SCALE

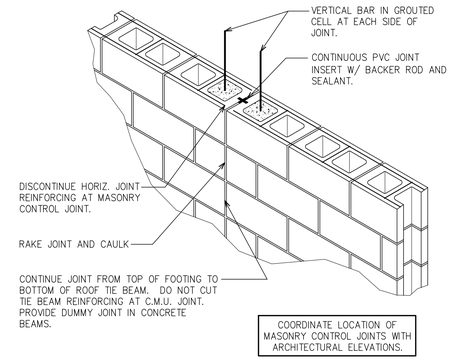

3 MASONRY CONTROL JOINT DETAIL

SCALE: 1 1/2" = 1'-0"

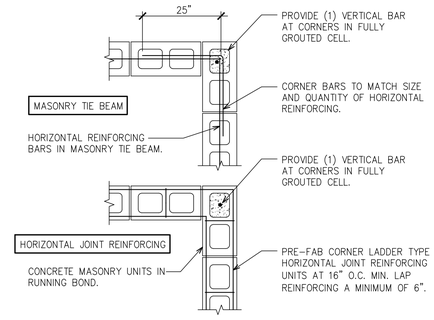

4 TYPICAL REINF. DETAIL AT CORNERS AND INTERSECTIONS

SCALE: N.T.S.

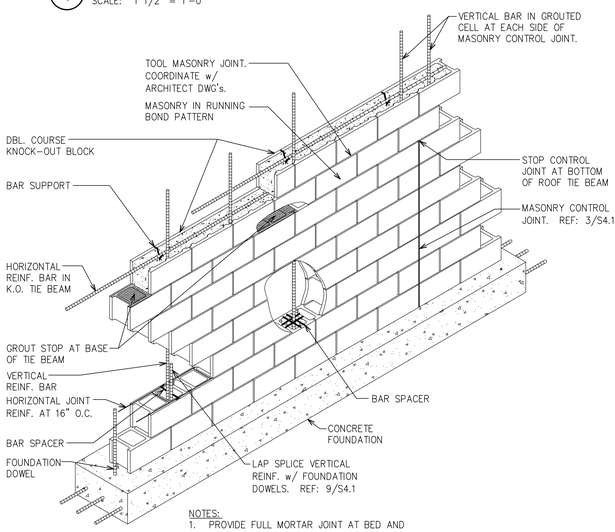

NOTES:

1. PROVIDE FULL MORTAR JOINT AT BED AND HEAD JOINTS FOR FIRST COURSE OF BLOCK.
2. GROUT MASONRY SOLID BELOW GRADE.

5 TYPICAL MASONRY CONSTRUCTION

NOT TO SCALE

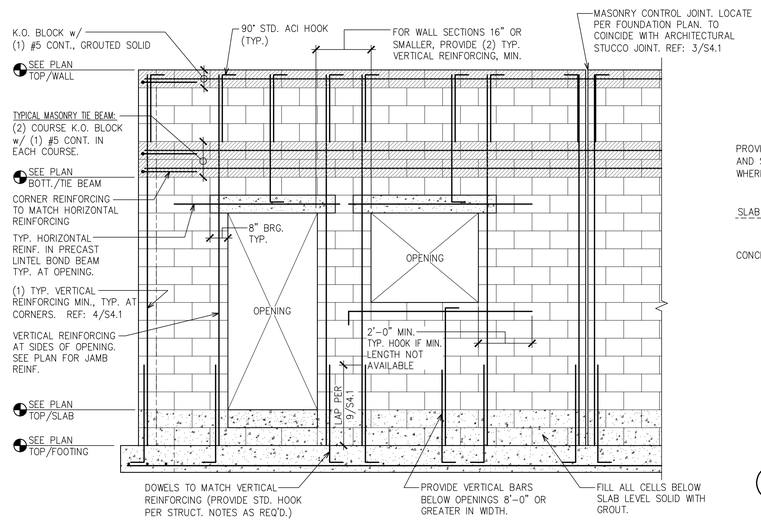

6 TYPICAL MASONRY REINFORCING AT OPENINGS – ELEVATION

NOT TO SCALE

NOTE:
CONTRACTOR SHALL VERIFY LOCATION OF ALL UNDERGROUND PIPING, CONDUIT, ETC. WITH APPROPRIATE SUBCONTRACTOR.

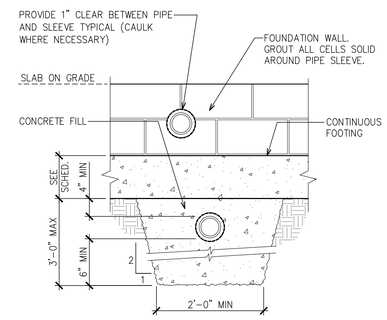

7 FOUNDATION DETAIL AT PENETRATION

NOT TO SCALE

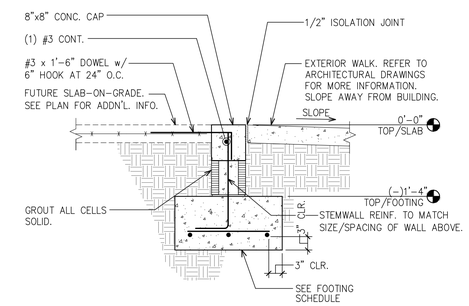

8 SECTION

SCALE: 3/4" = 1'-0"

NOTES:

1. SEE PLANS, SECTIONS AND NOTES FOR LOCATION(S) OF FILLED CELLS AND FOR REINFORCING.
2. CONCRETE FOR FILLED CELLS: STRENGTH = 3,000 PSI MIN. AT 28 DAYS MAX. AGGREGATE SIZE = 3/8" (PEA GRAVEL) SUBMIT MIX DESIGN FOR REVIEW BY THE ENGINEER. DO NOT USE THE SAME MIX AS DESIGNED FOR OTHER CAST-IN-PLACE CONCRETE.
3. ALLOW MORTAR TO SET PRIOR TO COMMENCING GROUTING.

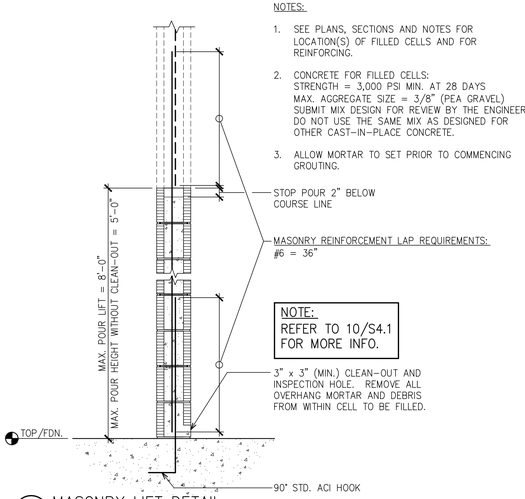

9 MASONRY LIFT DETAIL

SCALE: 3/4" = 1'-0"

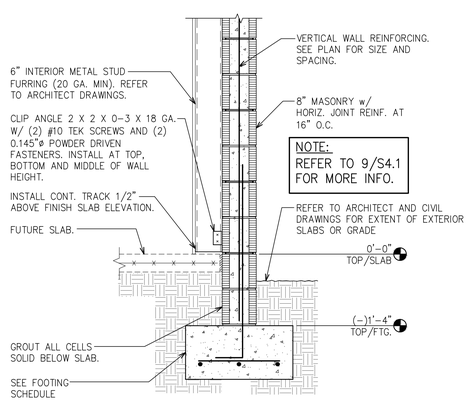

10 EXTERIOR WALL FOOTING

SCALE: 3/4" = 1'-0"

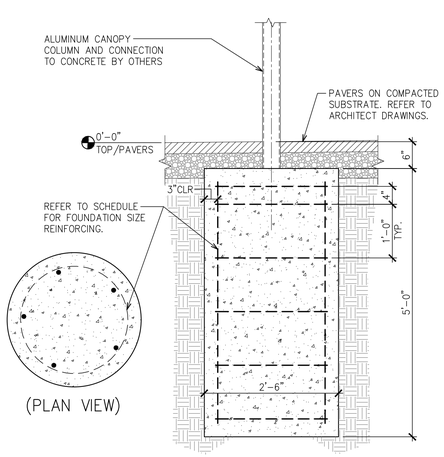

11 SECTION

SCALE: 3/4" = 1'-0"

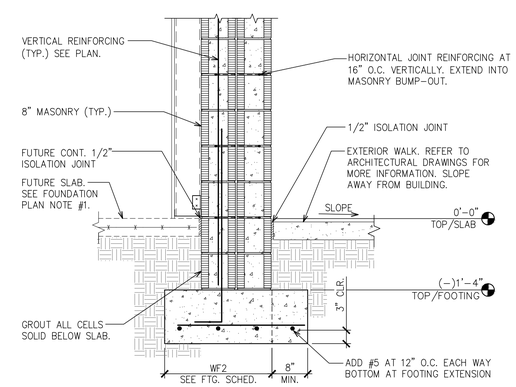

12 SECTION

SCALE: 3/4" = 1'-0"

FWH Architects
3336 Grand Blvd. Suite 201
Holiday, Florida 34690
Ph. 727. 815. 3336
Fax 727. 815. 3337

TO THE BEST OF THE KNOWLEDGE OF THE ARCHITECTS AND ENGINEERS, SAID PLANS AND SPECIFICATIONS COMPLY WITH THE APPLICABLE MINIMUM BUILDING CODES AND THE APPLICABLE MINIMUM FIRE SAFETY STANDARDS

Alan C Guenther, PE
FL PE #53308

no.	date	revision descriptions

STARBUCKS
SHELL CONSTRUCTION
1990 STATE ROAD 19
TAVARES, FL

03.25.2024
date

24007
comm. no.

SECTIONS AND DETAILS

S4.1

ACG PROFESSIONAL ENGINEERING, INC.
16912 Melissa Ann Dr. , Lutz, FL. , 33558
Ph: 813.963.1906 STRUCTURAL
Alan C. Guenther, P.E. #53308 / C.A. #26813

PLOT DATE: 3.22.2024

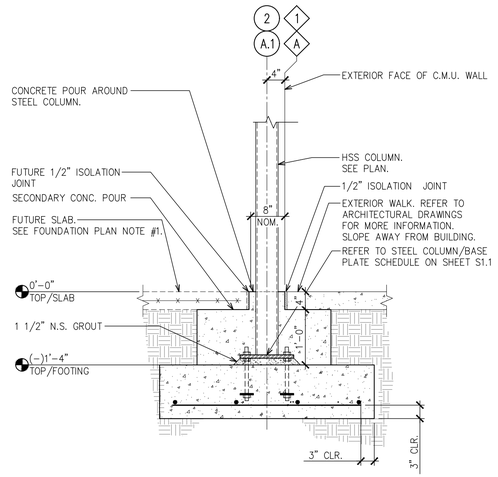

1 STEEL COLUMN FOUNDATION
SCALE: 3/4" = 1'-0"

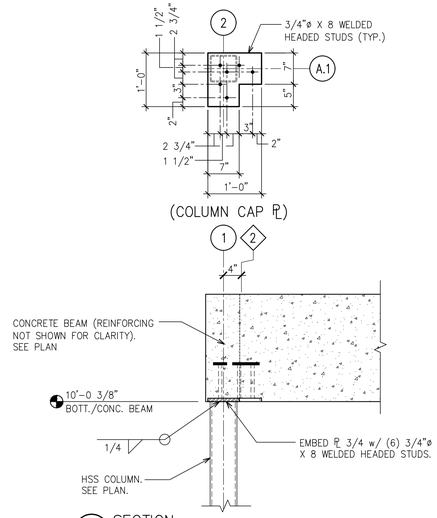

2 SECTION
SCALE: 3/4" = 1'-0"

NOTE:
PROVIDE (1) 2" X 20 GAUGE STRAP MINIMUM AT EACH END OF CONDENSING UNIT (2 TOTAL) WRAPPING OVER UNIT AND FASTENING TO ALUMINUM STAND W/ (4) #10 TEK SCREWS. FASTEN STRAP TO UNIT CASE W/ (1) #10 TEK SCREW AT 12" O.C. MAXIMUM

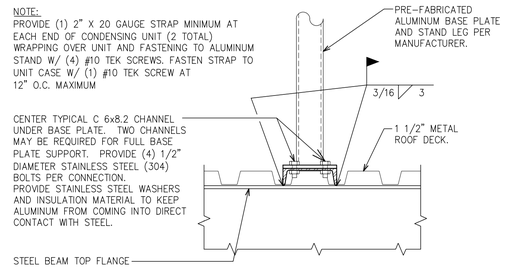

3 CONDENSING UNIT SUPPORT DETAIL
SCALE: 1 1/2" = 1'-0"

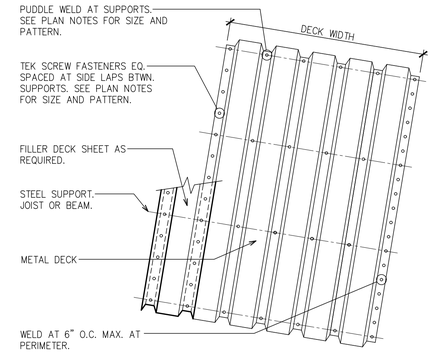

NOTES:
1. MINIMUM DECK BEARING AT END SUPPORTS = 2 1/2"
2. MINIMUM DECK LAP OVER SUPPORTS = 2"

4 METAL DECK ATTACHMENT
NOT TO SCALE

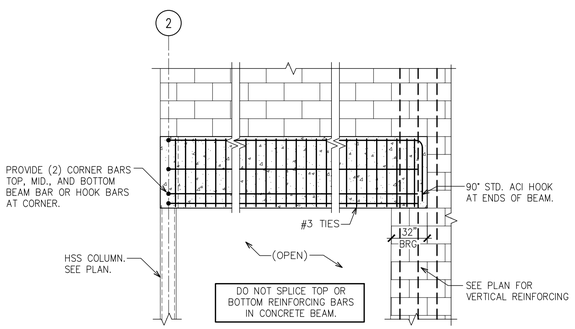

5 CONCRETE BEAM REINFORCING DETAIL
NOT TO SCALE

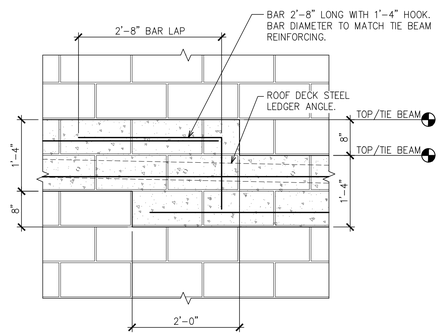

NOTES:
1. TYPICAL MASONRY TIE BEAM SHALL BE (2) COURSE KNOCK-OUT BLOCK WITH (1) #5 CONTINUOUS IN EACH COURSE AND GROUTED SOLID.
2. STEP TIE BEAM A MAXIMUM OF 8". LOCATE TIE BEAM STEPS AS REQUIRED WITH SLOPED DECK LEDGER ANGLE. REF: 4/S4.3

6 MASONRY TIE BEAM – STEP
NOT TO SCALE

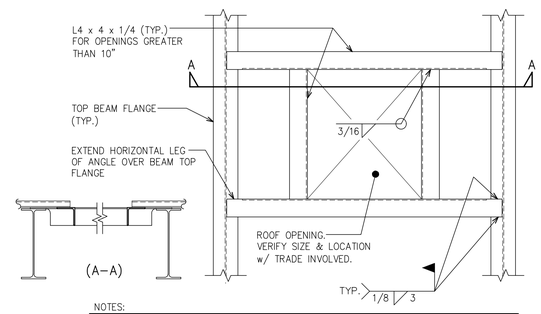

NOTES:
1. LOCATE L4 x 4 x 1/4 FRAMES AROUND ALL ROOF OPENINGS GREATER THAN 10".
2. CONTRACTOR SHALL VERIFY LOCATION AND SIZE OF OPENINGS PRIOR TO STEEL FABRICATION.
3. REFER TO 8/S4.2 FOR DECK OPENINGS BETWEEN 4" AND 10".
4. NOT INTENDED FOR ROOF TOP MECHANICAL EQUIPMENT SUPPORT. REFER TO 12/S4.2 FOR ANGLES SUPPORTING MECHANICAL UNITS.

7 ROOF OPENING
NOT TO SCALE

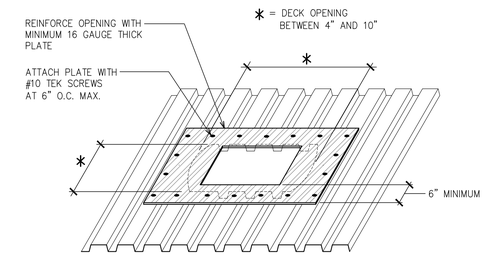

8 DECK REINFORCEMENT AT UNFRAMED ROOF OPENING
NOT TO SCALE

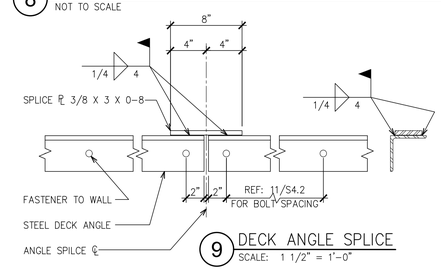

9 DECK ANGLE SPLICE
SCALE: 1 1/2" = 1'-0"

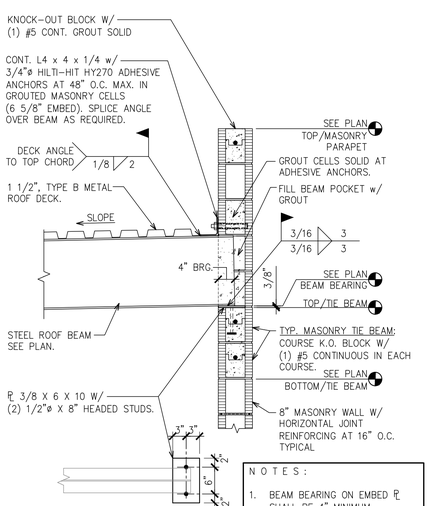

NOTES:
1. BEAM BEARING ON EMBED ℄ SHALL BE 4" MINIMUM.
2. EDGE OF BEAM BEARING EMBED ℄ SHALL BE FLUSH WITH INSIDE FACE OF MASONRY.

10 BEAM BEARING
SCALE: 3/4" = 1'-0"

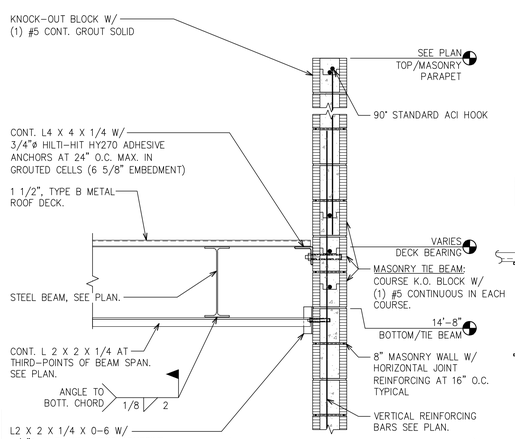

NOTES:
1. REFER TO 9/S4.2 FOR DECK ANGLE SPLICE.
2. STEP MASONRY TIE BEAM AS REQUIRED WITH SLOPED DECK. REFER TO 6/S4.2.

11 DECK BEARING
SCALE: 3/4" = 1'-0"

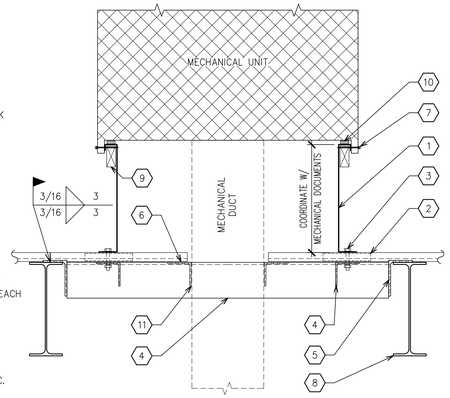

ROOF TOP UNIT FRAME SCHEDULE	
UNIT WEIGHT	ANGLE SIZE
0 – 1000 LB.	L4 X 4 X 1/4
1001 – 3000 LB.	L6 X 4 X 5/16

KEY NOTES:
1. PRE-FAB UNIT CURB. REFER TO MECHANICAL DOCUMENTS FOR REQUIREMENTS.
2. P.T. 2X4 X 0-6 LONG WOOD SUPPORT BLOCKING AT 24" O.C. (S.Y.P.) FASTEN TO DECK AS REQUIRED.
3. 1/2"ø THRU-BOLTS AT 24" O.C. MAXIMUM, (3) BOLTS REQUIRED PER SIDE MINIMUM, STARTING 12" FROM END/CORNER. PROVIDE NUTS AND LOCK WASHERS.
4. MECHANICAL UNIT SUPPORT ANGLE FRAME. REFER TO THE SCHEDULE FOR ANGLE SIZE. LONG LEG OF ANGLE IS VERTICAL.
5. ANGLE FRAME SEAT: L 6 X 4 X 5/16 X 0-5 (LLV).
6. METAL ROOF DECK. FASTEN TO SUPPPORT ANGLES WITH 5/8"ø PUDDLE WELDS AT 12" O.C.
7. FASTENING UNIT TO CURB (MINIMUM): 1/4-14 X 6" HWH SELF-DRILLING SCREW (BUILDEX OR EQUAL) WITH A #3 DRILL POINT AND ZINC COATED SPACED AT 12" O.C. MAXIMUM (ALL 4 SIDES), TYPICAL.
8. STEEL BEAM.
9. P.T. WOOD NAILER PER CURB MANUFACTURER.
10. GASKET SEALING MATERIAL AS REQUIRED PER UNIT MANUFACTURER.
11. L 4 X 4 X 1/4 METAL ROOF DECK SUPPORT ANGLE AT PERIMETER OF DECK OPENINGS.

12 MECHANICAL UNIT – CURB SUPPORT
SCALE: 1" = 1'-0"

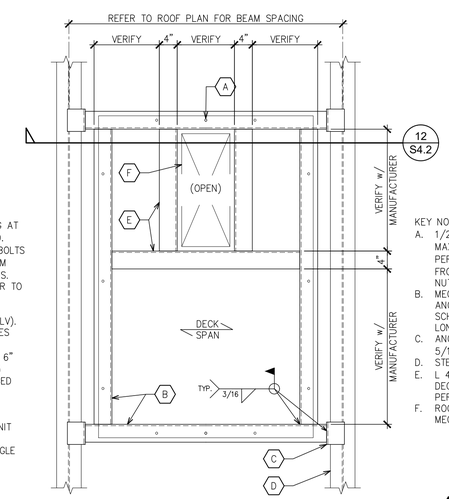

KEY NOTES:
A. 1/2"ø THRU-BOLTS AT 24" O.C. MAXIMUM, (3) BOLTS REQUIRED PER SIDE MINIMUM, STARTING 12" FROM END/CORNER. PROVIDE NUTS AND LOCK WASHERS.
B. MECHANICAL UNIT SUPPORT ANGLE FRAME. REFER TO THE SCHEDULE FOR ANGLE SIZE. LONG LEG OF ANGLE IS VERTICAL.
C. ANGLE FRAME SEAT: L 6 X 4 X 5/16 X 0-5 (LLV).
D. STEEL BEAM.
E. L 4 X 4 X 1/4 METAL ROOF DECK SUPPORT ANGLE AT PERIMETER OF DECK OPENINGS.
F. ROOF DECK OPENING FOR MECHANICAL DUCT.

13 ANGLE FRAME CURB SUPPORT–PLAN VIEW
SCALE: 3/4" = 1'-0"

FWH Architects
3336 Grand Blvd. Suite 201
Holiday, Florida 34690
Ph. 727. 815. 3336
Fax 727. 815. 3337

TO THE BEST OF THE KNOWLEDGE OF THE ARCHITECTS AND ENGINEERS, SAID PLANS AND SPECIFICATIONS COMPLY WITH THE APPLICABLE MINIMUM BUILDING CODES AND THE APPLICABLE MINIMUM FIRE SAFETY STANDARDS

Alan C Guenther, PE
FL PE #53308

no.	date	revision descriptions

STARBUCKS
SHELL CONSTRUCTION
1990 STATE ROAD 19
TAVARES, FL

03.25.2024
date

24007
comm. no.

SECTIONS AND DETAILS

S4.2

ACG
PROFESSIONAL ENGINEERING, INC.
16912 Melissa Ann Dr. , Lutz, FL , 33558
Ph: 813.963.1906 STRUCTURAL
Alan C. Guenther, P.E. #53308 / C.A. #26813

PLOT DATE: 3.22.2024

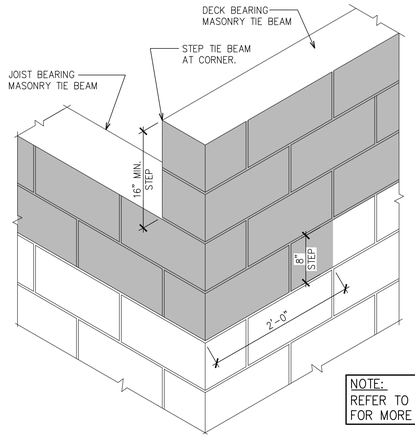

NOTE:
REFER TO 6/S4.2
FOR MORE INFO.

1 MASONRY TIE BEAM – CORNER CONDITION
NOT TO SCALE

REFER TO PLAN FOR
PILASTER DIMENSIONS
AND ADDITIONAL
VERTICAL REINFORCING.

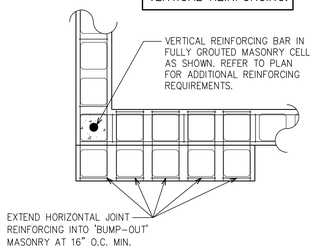

2 ENLARGED PILASTER DETAIL – PLAN VIEW
SCALE: 3/4" = 1'-0"

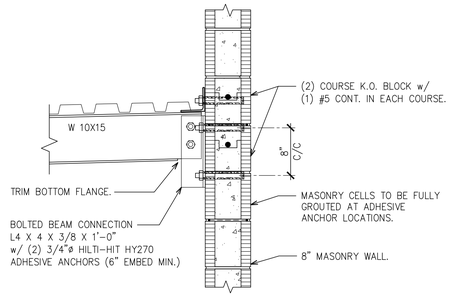

3 SECTION
SCALE: 1" = 1'-0"

PROFESSIONAL ENGINEERING, INC.
16912 Melissa Ann Dr. , Lutz, FL. , 33558
Ph: 813.963.1906 STRUCTURAL
Alan C. Guenther, P.E. #53308 / C.A. #26813

PLOT DATE: 3.22.2024

FWH Architects
3336 Grand Blvd. Suite 201
Holiday, Florida 34690
Ph. 727. 815. 3336
Fax 727. 815. 3337

TO THE BEST OF THE KNOWLEDGE OF THE ARCHITECTS AND ENGINEERS, SAID PLANS AND SPECIFICATIONS COMPLY WITH THE APPLICABLE MINIMUM BUILDING CODES AND THE APPLICABLE MINIMUM FIRE SAFETY STANDARDS

Alan C Guenther, PE
FL PE #53308

no.	date	revision descriptions

STARBUCKS
SHELL CONSTRUCTION
1990 STATE ROAD 19
TAVARES, FL

03.25.2024
date

24007
comm. no.

SECTIONS AND DETAILS

S4.3

STEPANEK–LEWIS AND ASSOCIATES
2257 TWELVE OAKS WAY, SUITE 103
WESLEY CHAPEL, FL 33544
PH (813) 991–1248
REGISTRY # 8397
24-019
MATTHEW D. LEWIS, P.E. FL LIC#56189

MECHANICAL SPECIFICATIONS

SCOPE: THE CONTRACTOR SHALL VISIT THE SITE AND EXAMINE THE DRAWINGS AND SPECIFICATIONS BEFORE SUBMITTING A PROPOSAL. ALL WORK SHALL BE IN ACCORDANCE WITH THE FLORIDA BUILDING CODES EIGHTH EDITION (2023), WITH ALL AMENDMENTS, AND LOCAL CODES AND ORDINANCES. THE SYSTEMS, EQUIPMENT, DEVICES AND ACCESSORIES SHALL BE INSTALLED, FINISHED, TESTED AND ADJUSTED FOR CONTINUOUS AND PROPER OPERATION. THE CONTRACTOR SHALL BE RESPONSIBLE FOR HIS WORK FITTING IN PLACE AND SHALL COORDINATE WITH OTHER TRADES TO AVOID INTERFERENCE WITH THEIR WORK. THE INFORMATION GIVEN HEREIN AND ON THE DRAWINGS IS AS EXACT AS COULD BE SECURED, BUT ITS EXTREME ACCURACY IS NOT GUARANTEED. THE DRAWINGS ARE DIAGRAMMATIC, INTENDED TO SHOW GENERAL ARRANGEMENT, CAPACITY AND LOCATION OF VARIOUS COMPONENTS, EQUIPMENTS, AND DEVICES. IF WORK IS REQUIRED IN A MANNER TO MAKE IT IMPOSSIBLE TO PRODUCE FIRST CLASS WORK, OR SHOULD DISCREPANCIES APPEAR AMOUNG THE CONTRACT DOCUMENTS, OR BETWEEN THE CONTRACT DOCUMENTS AND THE MANUFACTURER'S RECOMMENDATIONS,THE CONTRACTOR SHALL REQUEST INTERPRETATION BEFORE PROCEDING WITH WORK. CONTRACTOR SHALL FURNISH AND INSTALL ALL MINOR ITEMS WHICH ARE OBVIOUSLY AND REASONABLY NECESSARY TO COMPLETE THE INSTALLATION WHETHER OR NOT SPECIFIED IN THE DOCUMENTS.

REQUIRED COORDINATION: ALL WORK SHALL BE COORDINATED WITH ALL TRADES INVOLVED. OFFSETS IN DUCTS AND PIPING (INCLUDING DIVIDED DUCTS) AND TRANSITIONS AROUND OBSTRUCTIONS SHALL BE PROVIDED AT NO ADDITIONAL COST TO THE OWNER.

CONSTRUCTION PLANS: IN GENERAL, PLANS AND DIAGRAMS ARE SCHEMATIC ONLY AND SHOULD NOT BE SCALED.

REQUIRED ACCESS: CONTRACTOR SHALL ENSURE THAT ALL EQUIPMENT AND DEVICES THAT REQUIRE REPLACEMENT, SERVICING, ADJUSTING OR MAINTENANCE SHALL BE LOCATED TO ALLOW EASY ACCESS AND SPACE FOR REMOVAL OF INTERNAL ASSMBLIES, IF REQUIRED. CONTRACTOR SHALL PROVIDE ACCESS PANELS WHERE REQUIRED TO ALLOW ACCESS, EVEN IF NOT INDICATED ON THE DRAWINGS AT NO ADDITIONAL COST TO OWNER.

WIND RESISTANCE: ALL EQUIPMENT, APPLIANCE AND SUPPORTS LOCATED EXTERIOR OF THE FACILITY SHALL BE INSTALLED TO RESIST WIND LOADS AS DETAILED IN THE BUILDING CODE.

CUTTING AND PATCHING: ALL OPENINGS AROUND DUCT OR PIPE PENETRATIONS THROUGH SMOKE OR FIRE RATED FLOORS, CEILINGS OR WALLS SHALL BE SEALED AIRTIGHT WITH MATERIALS HAVING A RATING EQUAL TO THE MATERIAL OF THE WALL, CEILING OR FLOOR PENETRATED.

EQUIPMENT TAGS: ALL EQUIPMENT WILL HAVE A PERMANENTLY FIXED ENGRAVE PHENOLIC LABEL CORRESPONDING TO THE EQUIPMENT TAG ON THE ENGINEER'S DRAWINGS.

FIRESTOPPING: UL APPROVED MATERIALS AND METHODS SHALL PROTECT THE PENETRATIONS OF FIRE AND/OR SMOKE RATED WALLS, CEILINGS OR FLOORS. THE RATING OF THE FIRESTOPPING SHALL EQUAL THE RATING OF THE RATED ASSEMBLY. ALL INSULATION SHALL HAVE COMPOSITE FIRE AND SMOKE HAZARD RATINGS AS TESTED BY PROCEDURE ASTM E–84, NFPA–225, UL–723 NOT EXCEEDING:

FLAME SPREAD	25
SMOKE DEVELOPED	50
FUEL DISTRIBUTED	50

ACCESSORIES SUCH AS ADHESIVE, MASTIC, CEMENTS AND TAPES SHALL HAVE THE SAME COMPONENT RATING AS LISTED ABOVE.

START–UP: CONTRACTOR SHALL STARTUP ALL EQUIPMENT AND FOLLOW THE MANUFACTURER'S START–UP PROCEDURES.

OPERATING AND MAINTENANCE DATA: SUBMIT THREE COPIES OF MANUFACTURER'S OPERATING AND MAINTENANCE INSTRUCTIONS AND SPARE PARTS LIST FOR EACH PIECE OF EQUIPMENT.

CONDENSATE DRAIN PIPING: CONDENSATE DRAIN PIPING SHALL BE PVC TYPE DWV. DRAINS SHALL BE PITCHED NOT LESS THAN 1" IN 10'. RUNS SHALL BE AS SHORT AS POSSIBLE WITHOUT ANY DIPS TO TRAP WATER AND INTERFERE WITH PROPER DRAINAGE. PROVIDE TRAPS AND CLEANOUTS AT DRAIN PAN CONNECTIONS. RUN CONDENSATE DRAIN PER PLANS.

DIMENSIONAL DATA: ALL DUCTWORK DIMENSIONS SHOWN ON DRAWINGS ARE CLEAR INSIDE DIMENSIONS.

SUPPLEMENTARY SUPPORTS: CONTRACTOR SHALL PROVIDE ALL SUPPLEMENTARY STEEL REQUIRED TO SUSPEND MECHANICAL EQUIPMENT AND MATERIALS, IN ORDER TO PROVIDE A "VIBRATION–FREE" RIGID INSTALLATION.

DUCTWORK – GENERAL: FABRICATE AND INSTALL ALL DUCTWORK AND DUCT ACCESSORIES IN ACCORDANCE WITH THE LATEST EDITION OF SMACNA'S HVAC DUCT CONSTRUCTION STANDARDS–METAL AND FLEXIBLE, THE LATEST NFPA STANDARDS, AND THIS SPECIFICATION. THE MOST STRINGENT OF THESE SHALL BE THE MINIMUM STANDARD. MINIMUM OF 2" PRESSURE CLASS RATING FOR ALL FIBERGLASS DUCTWORK AND 2" FOR ALL SHEET METAL.

ALL NEW RIGID DUCTWORK SHALL BE GALVANIZED SHEET METAL STEEL OF LOCKFORMING GRADE CONFORMING TO ASTM A653 AND ASTM A924. G–60 ZINC COATING. REFER TO INSULATION SECTION BELOW FOR INSULATION REQUIRED ON SUPPLY AND RETURN DUCTWORK.

DUCTWORK INSTALLATION: ALL INTERIOR DUCTWORK SHALL BE SEALED TO SMACNA CLASS (C) REQUIREMENTS. PROVIDE DOUBLE THICKNESS TURNING VANES IN ALL NINETY (90) DEGREE SQUARE ELBOWS. CONTRACTOR SHALL FURNISH AND INSTALL ALL DUCT OFFSETS AS REQUIRED TO CLEAR INTERFERENCES WITH EXISTING BUILDING STRUCTURE, PIPES AND ELECTRICAL CONDUITS. FURNISH AND INSTALL ALL MISCELLANEOUS STEEL SUPPORTS REQUIRED FOR HANGING AND SUPPORTING DUCTWORK UNLESS OTHERWISE NOTED.

INSULATION: ASSURE ALL DUCTWORK IS SEALED PRIOR TO INSTALLING INSULATION.
ALL SHEET METAL SUPPLY & RETURN DUCTWORK SHALL BE WRAPPED WITH 2" THICK FIBERGLASS BLANKET INSULATION WITH FSK (ASJ) FACING, MINIMUM INSTALLED R VALUE OF 6.0, AND FLAME SPREAD/SMOKE DEVELOPED RATINGS OF 25/50 BY ASTM E–84.
ALL SHEET METAL SUPPLY & RETURN DUCTWORK SHALL ALSO BE LINED WITH 1.5" ACOUSTICAL DUCT LINER, TO BE UL–181 LISTED.
INSTALL INSULATION ON DUCTWORK USING ADHESIVE AND/OR WELD PINS WITH WASHERS.
SEAL ALL INSULATION JOINTS, SEAMS AND FASTENER PIN PENETRATIONS WITH VAPOR RETARDING PRESSURE SENSITIVE TAPE OR WITH GLASS FABRIC AND MASTIC.

SMOKE DETECTORS: INSTALL SMOKE DETECTORS AS RECOMMENDED BY MANUFACTURER TO ACQUIRE PROPER READINGS. LOCATION OF DUCT MOUNTED SMOKE DETECTORS ARE FOR REFERENCE LOCATION ONLY. FINAL PLACEMENT SHALL MEET ALL REQUIREMENTS IN THE MANUFACTURER'S INSTALLATION INSTRUCTIONS. PROVIDE 12"X12" ACCESS DOOR FOR INSPECTION AND SERVICE. SMOKE DETECTORS SHALL BE FURNISHED & WIRED BY ELECTRICIAN/FIRE ALARM CONTRACTOR AND INSTALLED BY MECHANICAL CONTRACTOR. WIRE SMOKE DETECTORS TO SHUTOFF UNIT WITH THE DETECTION OF SMOKE.

CONTROLS: PROVIDE CONTROLS COMPLETE TO SUIT THE EQUIPMENT PROVIDED AND TO ACCOMPLISH THE SEQUENCE OF OPERATION AS REQUIRED BY PLANS AND SYSTEMS. LOCATE THERMOSTATS 48" ABOVE FINISHED FLOOR, UNLESS OTHERWISE NOTED. THERMOSTATIC CONTROLS SHALL BE PROGRAMMABLE TO INCLUDE ALL ITEMS REQUIRED BY 2023 FBC–ENERGY CODE.

TESTING AND BALANCING: THE CONTRACTOR SHALL ENSURE THAT ALL DEVICES AND SYSTEMS ARE COMPLETE, TESTED AND BALANCED, AND READY FOR OPERATION WHEN THE FACILITY IS HANDED OVER THE OWNER. THE AIR CONDITIONING SYSTEM SHALL BE TESTED IN ACCORDANCE WITH AABC OR NEBB PROCEDURES. WRITTEN REPORT SHALL BE SUBMITTED TO MECHANICAL ENGINEER FOR APPROVAL.

SUBMITTALS REQUIRED:
SUBMIT SHOP DRAWINGS FOR ALL MATERIALS, EQUIPMENT, AND SYSTEMS REQUIRED BY THESE DOCUMENTS (SEE ARCH. PLANS/SPECS FOR SPECIFIC FORMATTING), INCLUDING:
- ROOFTOP UNITS
- EXHAUST FAN
- ROOF A/C STANDS
- DUCTWORK & SHEET METAL ACCESSORIES (CONNECTIONS, MASTICS, ETC.)
- THERMOSTATS & CONTROLS

SUBSTITUTIONS: RTU'S MUST BE MANUFACTURED BY TRANE – NO EXCEPTIONS! FOR ALL OTHER EQUIPMENT, CONTRACTOR SHALL PAY FOR ANY AND ALL ADDED COSTS ASSOCIATED WITH ANY SUBSTITUTION, INCLUDING SUBSTITUTIONS THAT REQUIRE CHANGES TO THE OTHER BUILDING COMPONENTS, SUCH AS ELECTRICAL, STRUCTURAL REINFORCING, CEILINGS, WALLS, ROOFS, ETC. THIS WILL INCLUDE ANY ENGINEERING/ARCHITECTURAL RE–DESIGN COSTS AS A RESULT OF SAID SUBSTITUTION. THESE COSTS SHALL NOT BE BORNE BY THE OWNER, ARCHITECT, NOR ENGINEER, REGARDLESS OF ACCEPTABILITY OF SUBSTITUTION. ENGINEER RESERVES THE RIGHT TO ACCEPT OR DENY ANY SUBSTITUTION THAT HE DOES NOT DEEM TO BE EQUIVALENT, AND CONTRACTOR SHALL PROVIDE SPECIFIED OR EQUIVALENT MATERIALS/EQUIPMENT AT NO ADDITION COST TO OWNER, SHOULD A SUBSTITUTION BE DENIED.

GUARANTEE: THE ONE–YEAR GUARANTEE PERIOD SHALL NOT START UNTIL THE PROJECT IS FULLY COMPLETED AND THE CONTRACTOR HAS RECEIVED THE FINAL PAYMENT. ALL NEW EQUIPMENT AND ALL WORK SHALL BE FULLY GUARANTEED, PARTS AND LABOR, FROM DEFECTS IN MATERIAL AND WORKMANSHIP FOR ONE YEAR FROM THE DATE OF THE FINAL PAYMENT, AT NO ADDITIONAL COST TO OWNER. REPAIRS MADE DURING THIS PERIOD MUST BE FULLY GUARANTEED FROM DEFECTS IN MATERIAL AND WORKMANSHIP AT NO EXPENSE TO THE OWNER, FOR AN ADDITIONAL ONE YEAR PERIOD FROM THE DATE OF REPAIRSAT NO ADDITIOAL COST TO OWNER. IN ADDITION, THE CONTRACTOR SHALL ASSUME FULL RESPONSIBILITY FOR ANY DAMAGE TO THE BUILDING, AND ITS CONTENTS OR OTHER EQUIPMENT, CAUSED BY DEFECTS OR IMPROPER INSTALLATION OF EQUIPMENT OR MATERIAL INSTALLED. ALL NEW HVAC UNITS SHALL INCLUDE 5–YEAR WARRANTY ON COMPRESSORS AND 1–YEAR WARRANTY ON ALL OTHER PARTS AND LABOR FOR UNIT.

HVAC LEGEND

	NEW DUCTWORK, WITH SIZE LISTED
SD	DUCT SMOKE DETECTOR
T	THERMOSTAT BASE
CO2	CARBON DIOXIDE SENSOR
BTU/H	BRITISH THERMAL UNITS / HOUR
ø	ROUND, DIAMETER
CD	CONDENSATE DRAIN PIPING
CFM	CUBIC FEET PER MINUTE
TYP	TYPICAL – ITEM OR METHOD
S	REMOTE SENSOR
	SUPPLY AIR DIFFUSER OR GRILLE
	RETURN/EXH. AIR REGISTER OR GRILLE
	FLEXIBLE DUCT
	AIRFLOW DIRECTION
AFF	ABOVE FINISHED FLOOR
	ROUND DUCT TAKE–OFF WITH VOLUME DAMPER
VD /	MANUAL VOLUME DAMPER (W/HANDLE)

DIFFUSER TAG
AIRFLOW
400 CFM
CD–12"ø
MARK
NECK SIZE

EQUIPMENT TAG
EQUIPMENT TYPE
RTU–1
EQUIPMENT NUMBER

FWH Architects
3336 Grand Blvd. Suite 201
Holiday, Florida 34690
Ph. 727. 815. 3336
Fax 727. 815. 3337

TO THE BEST OF THE KNOWLEDGE OF THE ARCHITECTS AND ENGINEERS, SAID PLANS AND SPECIFICATIONS COMPLY WITH THE APPLICABLE MINIMUM BUILDING CODES AND THE APPLICABLE MINIMUM FIRE SAFETY STANDARDS

MATTHEW D. LEWIS LICENSE No 56189 STATE OF FLORIDA PROFESSIONAL ENGINEER

no.	date	revision descriptions

STARBUCKS
SHELL CONSTRUCTION
1990 STATE ROAD 19
TAVARES, FL

03.25.2024
date

24007
comm. no.

MECHANICAL SPECIFICATIONS

M1.0

KEY NOTES ON PLANS:

1. PACKAGED ROOFTOP A/C UNIT – COORDINATE FINAL LOCATION WITH G.C.
2. ROOF MOUNT EXHAUST FAN – LOCATE MIN. 10–FT FROM RTU INTAKES.
3. PROVIDE 3–FT LONG FULL SIZE (MIN. 12"X12") DUCT DROP DOWN BELOW ROOF.
4. COORDINATE UNIT INSTALLATION REQUIREMENTS WITH G.C. AND STRUCTURAL PLANS AND DETAILS.
5. INSTALL THERMOSTAT & CO2 SENSOR TEMPORARILY ON WALL WITH 150–FT EXTRA WIRING COILED AT UNIT. (TYPICAL)
6. ROUTE CONDENSATE PIPING ON ROOF PIPE SUPORTS AT 4–FT INTERVALS.
7. INSTALL DUCT SMOKE DETECTOR IN SUPPLY DUCT DROP. (TYPICAL–2 RTU'S)
8. MECHANICAL CONTRACTOR SHALL FURNISH AND G.C. TO INSTALL NEW ROOF STAND FOR FUTURE TENANT ICE MACHINE CONDENSER.
9. OUTSIDE AIR INTAKE ON THIS END OF RTU – COORDINATE INSTALL TO ENSURE MIN. 10–FT CLEAR FROM EXHAUST FAN AND PLUMBING VENT STACKS.
10. PROVIDE 4–FT LONG FULL–SIZE DUCT DROPS WITH OPEN ENDS INTO CEILING CAVITY FOR FUTURE TENANT CONNECTION.
11. 12"X12" PIPE CURB FOR FUTURE ICE MACHINE CONDENSER.
12. SPILL CONDENSATE MANIFOLD INTO PRIMARY ROOF DRAIN. (CONNECTS TO UNDERGROUND STORM)
13. PERMANENT LADDER AND ROOF HATCH IN BUILDING FOR ROOF ACCESS.
14. PLUMBING VENT THROUGH ROOF LOCATED 10–FT FROM ALL FRESH AIR INTAKES.
15. POWER EXHAUST LOCATED ON SIDE OF RTU.

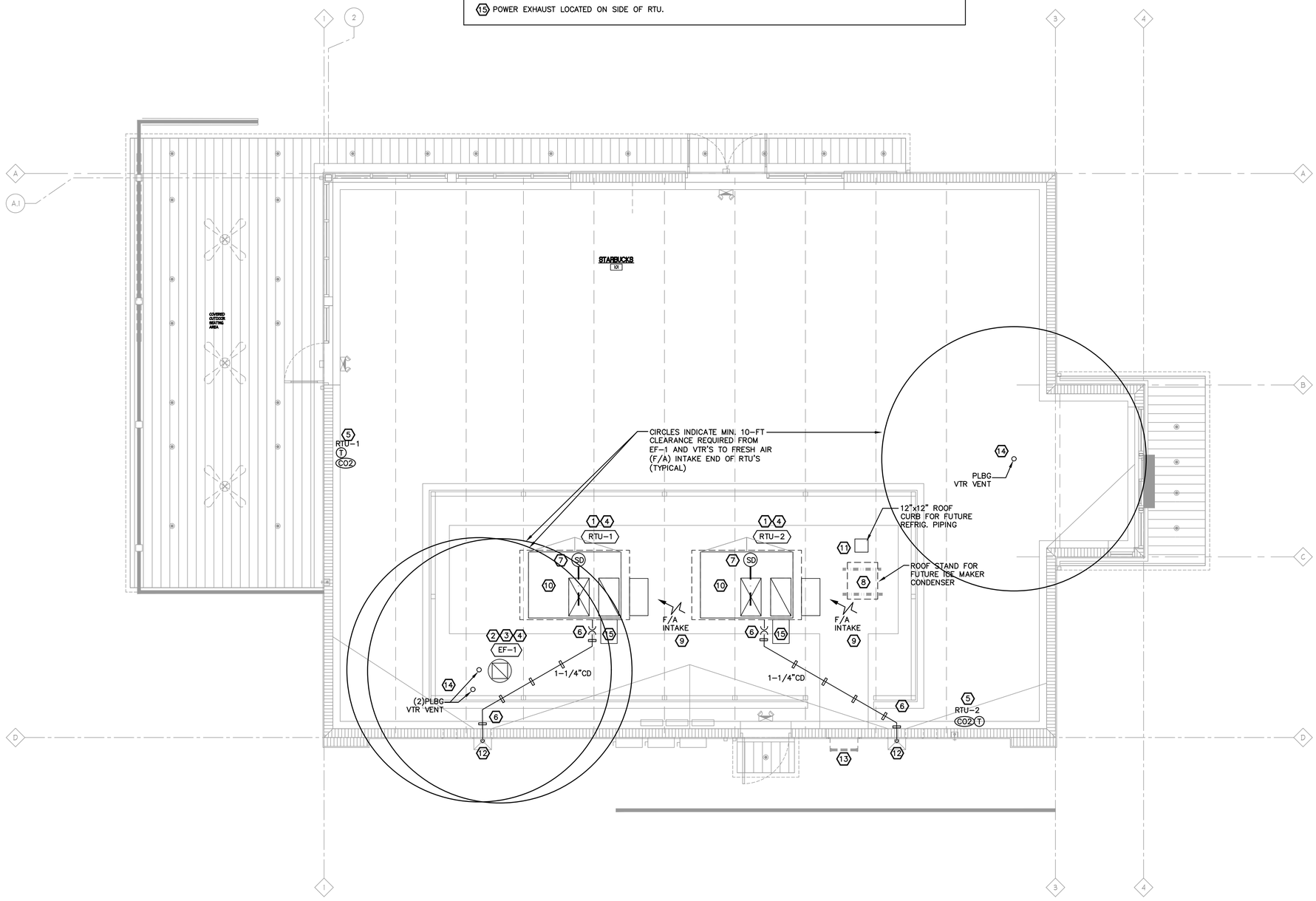

MECHANICAL ROOF PLAN

SCALE: 1/4" = 1'–0"

NORTH

STEPANEK–LEWIS AND ASSOCIATES
2257 TWELVE OAKS WAY, SUITE 103
WESLEY CHAPEL, FL 33544
PH (813) 991–1248
REGISTRY # 8397
24-019
MATTHEW D. LEWIS, P.E. FL LIC#56189

FWH Architects
3336 Grand Blvd. Suite 201
Holiday, Florida 34690
Ph. 727. 815. 3336
Fax 727. 815. 3337

TO THE BEST OF THE KNOWLEDGE OF THE ARCHITECTS AND ENGINEERS, SAID PLANS AND SPECIFICATIONS COMPLY WITH THE APPLICABLE MINIMUM BUILDING CODES AND THE APPLICABLE MINIMUM FIRE SAFETY STANDARDS

MATTHEW D. LEWIS LICENSE No 56189 STATE OF FLORIDA PROFESSIONAL ENGINEER

no.	date	revision descriptions

STARBUCKS
SHELL CONSTRUCTION
1990 STATE ROAD 19
TAVARES, FL

03.25.2024
date

24007
comm. no.

MECHANICAL ROOF PLAN

M2.0

STEPANEK-LEWIS AND ASSOCIATES
2257 TWELVE OAKS WAY, SUITE 103
WESLEY CHAPEL, FL 33544
PH (813) 991-1248
REGISTRY # 8397
24-019
MATTHEW D. LEWIS, P.E. FL LIC#56189

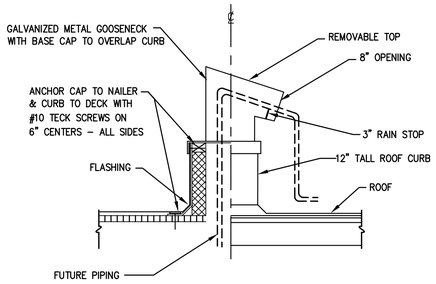

NOTE: LOCATE SO PIPING PENETRATIONS ARE NOT UNDER UNIT PLATFORMS.

ROOF PIPE CURB DETAIL

SCALE: NONE

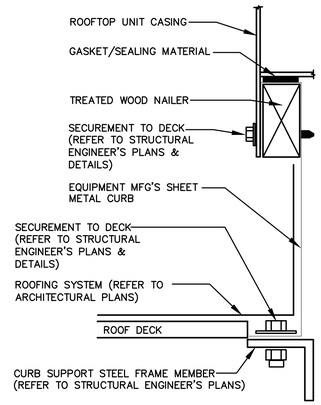

ATTACHMENT OF RTU AND FAN ROOFTOP CURBS

SCALE: NONE

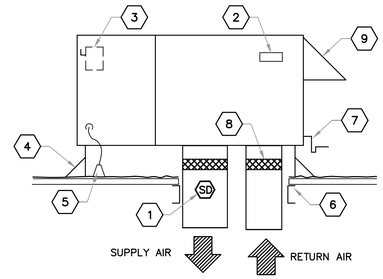

1. CONTRACTOR SHALL PROVIDE AND INSTALL AN APPROVED DUCT MOUNTED SMOKE DETECTOR FOR ALL RTU'S DELIVERING 2000 CFM OR MORE.
2. UNIT IDENTIFICATION PLATE SCREWED TO UNIT.
3. DISCONNECT SWITCH. DO NOT MOUNT HIGHER THAN UNIT.
4. PREFAB CURB.
5. PATE PIPING PLUG FOR CONTROL, DO NOT RUN IN POWER CONDUIT. DO NOT USE "PATE" PIPING PLUGS AS NOTED WHERE UNIT MANUFACTURER HAS PROVIDED OPENINGS INSIDE PERIMETER CURB.
6. CUT HOLE IN ROOF ONLY LARGE ENOUGH FOR DUCT & PROVIDE STRUCTURAL SUPPORT FOR DECKING.
7. CONDENSATE TRAP (REFER TO DETAIL). ROUTE CONDENSATE AS INDICATED ON DRAWINGS.
8. FLEXIBLE CONNECTION.
9. OUTDOOR AIR INTAKE.

ROOFTOP UNIT DETAIL

SCALE: NONE

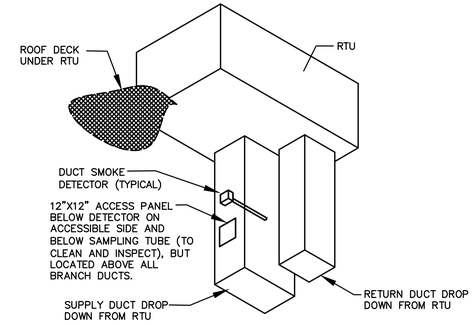

RTU DUCT SMOKE DETECTOR ISOMETRIC DETAIL

NOT TO SCALE

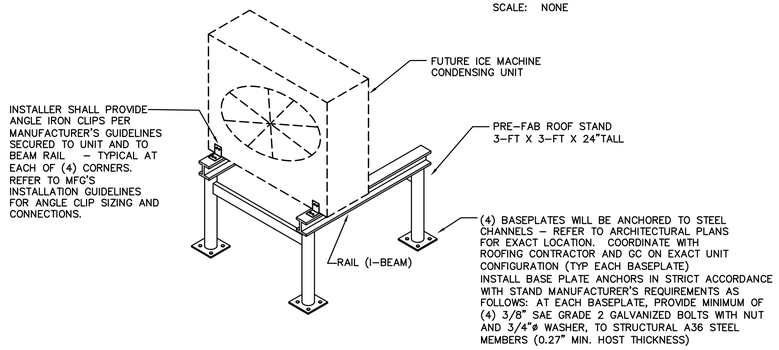

CONDENSER ROOF STAND DETAIL (FUTURE COOLER CONDENSER)

SCALE: NONE

PRECISION ALUMINUM PRODUCTS "ALUMA-STAND" IS BASIS OF DESIGN (FL. PRODUCT APPROVAL # 16921.R2)
ALTERNATE MFGS INCLUDE METULLUM ENTERPRISES & MIAMI TECH (NO OTHER MFG ALLOWED)
STAND SHALL BE LISTED FOR 150-MPH+ WIND LOADING & LOCAL WIND LOADING PER CODE.
COORDINATE WITH ROOFING CONTRACTOR AND GC ON EXACT UNIT CONFIGURATION TO SUIT FIELD CONDITIONS (TYP EACH BASEPLATE) INSTALL ANCHORS IN ACCORDANCE WITH STAND MANUFACTURER'S GUIDELINES. IF REQUIRED, CONTRACTOR SHALL PROVIDE ADDITIONAL STEEL ANGLE SUPPORTS REQUIRED TO SPAN JOISTS AT NO ADDITIONAL COST.

NOTE: ANY SUBSTITUTIONS FOR THE PRE-FAB STAND SHALL BE FLORIDA PRODUCT APPROVED TO MATCH SPECIFIED UNIT ABOVE.

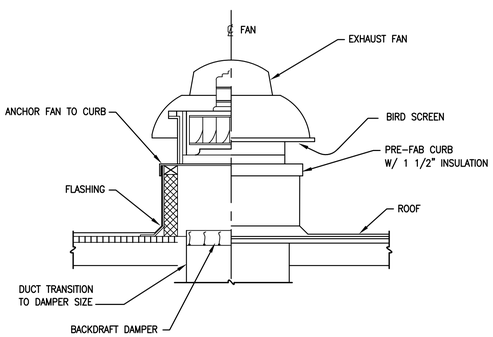

ROOF EXHAUST FAN DETAIL

SCALE: NONE

NOTE:
INSTALL FAN 10 FEET FROM ANY SOURCE OF FRESH AIR INTAKE.

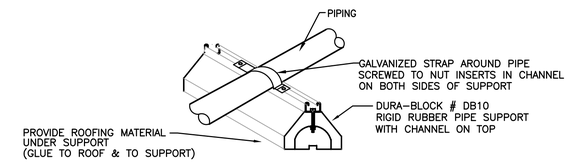

ROOF CONDENSATE PIPE SUPPORT DETAIL

SCALE: NONE

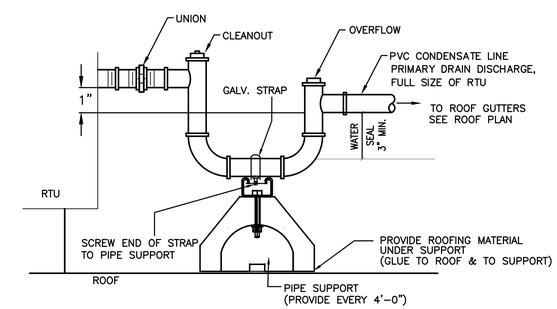

RTU CONDENSATE P-TRAP DETAIL

SCALE: NONE

EXHAUST FAN SCHEDULE

NO SUBSTITUTIONS ALLOWED FOR FAN

GENERAL					CONSTRUCTION						
MARK	CFM	SONES	ESP (IN-WG)	ELEC.	MOTOR	DRIVE	TYPE FAN	MANUF.	MODEL	WEIGHT (lbs)	NOTES
EF-1	600	7.4	0.5	120V/1PH	1/4-HP	DIRECT	ROOF DNBLAST	GREENHECK	G-095-VG	22	1 2

NOTE:
1. PROVIDE FAN WITH 18" TALL ROOF CURB, DOWNBLAST HOUSING, FAN SPEED CONTROLLER AT FAN UNDER HOOD, AND BACKDRAFT DAMPER.
2. DISCONNECT BY ELECTRICIAN. INTERLOCK FOR OPERATION BY FUTURE TENANT CONTRACTOR.

HIGH EFFICIENCY PACKAGED DX ROOF TOP UNIT SCHEDULE

NO SUBSTITUTIONS ALLOWED FOR RTU'S

							BLOWER	COOLING		COOLING CAP		HEATING CAP		POWER													
								ENT AIR						CONDENSER FAN		COMPRESSOR											
MARK	CFM	O/A CFM	ESP IN. WG.	POWER	NOMINAL TONS	ARI EFFIC. EER/IEER	HP	DB	WB	TOTAL MBH	SENS. MBH	INPUT KW	OUTPUT MBH	QTY.	FLA	QTY.	RLA	LRA	MCA AMPS	MOCP AMPS	AMBIENT TEMP.	FILTER TYPE	BASE WGT LBS	MFG.	MODEL	NOTES
RTU-1	5,000	500	0.8	208V/3ø	12.5	11.1/15.3	5.00	76.8	63.9	138.7	112.3	13.5	46.1	1	4.3	2	28.4/14.1	191/83.1	71.0	90	95°F	2"/30%	1,218	TRANE	THJ150*3	1 2 3 4 5 6 7 8 9 10 11
RTU-2	5,000	500	0.8	208V/3ø	12.5	11.1/15.3	5.00	76.8	63.9	138.7	112.3	13.5	46.1	1	4.3	2	28.4/14.1	191/83.1	71.0	90	95°F	2"/30%	1,218	TRANE	THJ150*3	1 2 3 4 5 6 7 8 9 10 11

NOTE:
1. PROVIDE WITH 7-DAY A WEEK PROGRAMMABLE (TEMPORARY) THERMOSTAT, MEETING ALL CODE REQUIREMENTS (SEE SPECIFICATIONS). INCLUDE EXTRA 150-FT LENGTH OF WIRING FOR TEMPORARY MOUNTING, COIL BELOW RTU.
2. PROVIDE MFG'S 14" TALL INSULATED ROOF CURB, EITHER SLOPED WITH ROOF, OR WITH SHIM KIT, AS NEEDED, FOR LEVEL UNIT INSTALLATION.
3. PROVIDE SINGLE POINT POWER TO UNIT INCLUDING HEAT STRIP (ALL SERVICE DISCONNECTS AND CONVENIENCE OUTLETS BY ELECTRICIAN – NOT FURNISHED WITH RTU)
4. INSTALL DUCT SMOKE DETECTOR IN SUPPLY DUCT DROP BELOW UNIT (FURNISHED & WIRED BY ELECTRICIAN)
5. PROVIDE SEACOAST CORROSION COATING ON CONDENSER COILS (5,000-HOUR).
6. PROVIDE WITH A SECONDARY (AUXILIARY) OVERFLOW DRAIN FLOAT SWITCH IN CONDENSATE PAN, INTERLOCKED WITH FAN MOTOR FOR SHUTDOWN.
7. PROVIDE HAIL GUARD AROUND CONDENSER COILS.
8. PROVIDE WITH LOW AMBIENT COOLING AND # COOLING CIRCUITS PER SCHEDULE.
9. FINAL UNIT COOLING CAPACITY, HEATING CAPACITY AND LOCATIONS MUST BE APPROVED BY TENANT AND LANDLORD, PRIOR TO BID.
10. PROVIDE WITH ECONOMIZER OUTSIDE AIR INTAKE SYSTEM WITH SCREENED HOOD AND POWERED EXHAUST FAN, WITH ENTHALPY CONTROLS, FAULT DETECTION, AND DIAGNOSTIC CAPABILITIES MATCHING REQUIREMENTS OF 2023 FBC-MECH. C403.2.4.7. IN ADDITION, PROVIDE CO2 SENSOR WITH CONTROLS/SENSOR, COMPATIBLE WITH ECONOMIZER SYSTEM.
11. PROVIDE WITH TWO SPEED EVAPORATOR FAN WITH VFD CONTROLLER, TO COMPLY WITH FL ENERGY CODE, 403.2.12.5.

PROVIDE STARTUP FORMS AND COMPLETED PRE-FUNCTION CHECKLIST PER STARBUCKS T.I. COMMISSIONING PLAN.

SEQUENCE OF OPERATIONS FOR HVAC EQUIPMENT

SUPPLY FANS: THE EVAPORATOR FAN WILL RUN CONTINUOUSLY DURING OCCUPIED HOURS, AND CYCLE ON/OFF WITH COOLING/HEATING WHEN IN UN-OCCUPIED MODE, ACCORDING TO THERMOSTAT PROGRAMMING, AND SUBJECT TO FIRE ALARM SHUTDOWN (DUCT SMOKE DETECTOR).

OUTSIDE AIR DAMPER: THE DAMPER CLOSES WHEN THE UNIT IS OFF. DAMPER SHALL OPEN TO MINIMUM POSITION WHEN SUPPLY FAN STARTS TO AND STAY OPEN DURING OCCUPIED MODE. IF CO2 SENSOR MEASURES OVER 800-PPM (OR USER PROGRAMMING), THEN THE DAMPER SHALL OPEN TO FULLY BALANCED POSITION. ECONOMIZER MODE FOR 100% FRESH AIR, SHALL BE AVAILABLE WHEN OUTSIDE CONDITIONS HAVE LOWER ENTHALPY THEN INTERIOR (28.0-BTU PER LB OF DRY AIR, OCCUPIED OR UNOCCUPIED)

COOLING COIL: THE COOLING COIL AND COMPRESSORS SHALL ENERGIZE TO MAINTAIN SPACE COOLING SETPOINT. (75°F OCCUPIED/ 80°F UNOCC.).

HEATING COIL: THE ELECTRIC HEAT COIL WILL ENERGIZE IN CONTROL STAGES TO MAINTAIN SPACE HEATING SETPOINT. (68°F OCC/60°F UNOCC.).

FAN: THE EXHAUST FAN WILL NOT BE OPERATIONAL UNTIL INTERIOR BUILD-OUT OCCURS, AS DESIGNED BY INTERIOR ENGINEER.

SUBSTITUTIONS:
STARBUCKS REQUIRES THAT RTU'S ARE MANUFACTURED BY TRANE AND SHALL BE PURCHASED UNDER STARBUCKS NATIONAL ACCOUNTS. SUBSTITUTIONS WILL NOT BE ACCEPTED UNDER ANY CIRCUMSTANCES.

THE MECHANICAL ENGINEER OF RECORD FOR THE SHELL HAS SIZED RTU'S BASED ON THE LANDLORD'S LEASE CRITERIA ONLY. THE UNITS SPECIFIED SHALL BE THE BASIS OF THE CONTRACTOR'S BIDS. PRIOR TO CONSTRUCTION, STARBUCKS WILL PROVIDE A COMPLETE SET OF INTERIOR FINISH-OUT PLANS THAT WILL INCLUDE SIZING OF RTU'S BASED ON OCCUPANT AND EQUIPMENT LOADS WITHIN THE BUILDING. FOR THIS REASON, THE EQUIPMENT SIZES SHOW ON THE SHELL DOCUMENTS ARE SUBJECT TO CHANGE. UNDER NO CIRCUMSTANCES SHALL THE MECHANICAL CONTRACTOR SUBMIT SHOP DRAWINGS OR ORDER RTU'S UNTIL THE INTERIOR FINISH-OUT DOCUMENTS HAVE BEEN RECIEVED. THE ARCHITECT SHALL IMMEDIATELY NOTIFY THE GENERAL CONTRACTOR UPON RECEIPT AND, AT THAT TIME, WILL MAKE HIM AWARE OF ANY NECESSARY CHANGES.

FWH Architects
3336 Grand Blvd. Suite 201
Holiday, Florida 34690
Ph. 727. 815. 3336
Fax 727. 815. 3337

TO THE BEST OF THE KNOWLEDGE OF THE ARCHITECTS AND ENGINEERS, SAID PLANS AND SPECIFICATIONS COMPLY WITH THE APPLICABLE MINIMUM BUILDING CODES AND THE APPLICABLE MINIMUM FIRE SAFETY STANDARDS

MATTHEW D. LEWIS LICENSE No 56189 STATE OF FLORIDA PROFESSIONAL ENGINEER

no.	date	revision descriptions

STARBUCKS
SHELL CONSTRUCTION
1990 STATE ROAD 19
TAVARES, FL

03.25.2024
date

24007
comm. no.

MECHANICAL DETAILS & SCHEDULES

M3.0

STEPANEK-LEWIS AND ASSOCIATES
2257 TWELVE OAKS WAY, SUITE 103
WESLEY CHAPEL, FL 33544
PH (813) 991-1248
REGISTRY # 8397
24-019
MATTHEW D. LEWIS, P.E. FL LIC#56189

PLUMBING SPECIFICATIONS

SCOPE: THE CONTRACTOR SHALL VISIT THE SITE AND EXAMINE THE DRAWINGS AND SPECIFICATIONS BEFORE SUBMITTING A PROPOSAL. ALL WORK SHALL BE IN ACCORDANCE WITH THE FLORIDA BUILDING CODES EIGHTH EDITION (2023), WITH AMENDMENTS, AND LOCAL CODES AND ORDINANCES. INSTALLATION SHALL COMPLY WITH THE CODE REFERENCED STANDARDS SET BY NFPA, ASHRAE, ASPE, SMACNA, NEC AND UL. THE SYSTEMS, EQUIPMENT, DEVICES AND ACCESSORIES SHALL BE INSTALLED, FINISHED, TESTED AND ADJUSTED FOR CONTINUOUS AND PROPER OPERATION. THE CONTRACTOR SHALL BE RESPONSIBLE FOR HIS WORK FITTING IN PLACE AND SHALL COORDINATE WITH OTHER TRADES TO AVOID INTERFERENCE WITH THEIR WORK. THE INFORMATION GIVEN HEREIN AND ON THE DRAWINGS IS AS EXACT AS COULD BE SECURED, BUT ITS EXTREME ACCURACY IS NOT GUARANTEED. THE DRAWINGS ARE DIAGRAMMATIC, INTENDED TO SHOW GENERAL ARRANGEMENT, CAPACITY AND LOCATION OF VARIOUS COMPONENTS, EQUIPMENTS, AND DEVICES. IF WORK IS REQUIRED IN A MANNER TO MAKE IT IMPOSSIBLE TO PRODUCE FIRST CLASS WORK, OR SHOULD DISCREPANCIES APPEAR AMOUNG THE CONTRACT DOCUMENTS, OR BETWEEN THE CONTRACT DOCUMENTS AND THE MANUFACTURER'S RECOMMENDATIONS,THE CONTRACTOR SHALL REQUEST INTERPRETATION BEFORE PROCEDING WITH WORK. CONTRACTOR SHALL FURNISH AND INSTALL ALL MINOR ITEMS WHICH ARE OBVIOUSLY AND REASONABLY NECESSARY TO COMPLETE THE INSTALLATION WHETHER OR NOT SPECIFIED IN THE DOCUMENTS.

REQUIRED COORDINATION: ALL WORK SHALL BE COORDINATED WITH ALL TRADES INVOLVED. OFFSETS IN DUCTS AND PIPING (INCLUDING DIVIDED DUCTS) AND TRANSITIONS AROUND OBSTRUCTIONS SHALL BE PROVIDED AT NO ADDITIONAL COST TO THE OWNER.

CONSTRUCTION PLANS: IN GENERAL, PLANS AND DIAGRAMS ARE SCHEMATIC ONLY AND SHOULD NOT BE SCALED.

REQUIRED ACCESS: CONTRACTOR SHALL ENSURE THAT ALL EQUIPMENT AND DEVICES THAT REQUIRE REPLACEMENT, SERVICING, ADJUSTING OR MAINTENANCE SHALL BE LOCATED TO ALLOW EASY ACCESS AND SPACE FOR REMOVAL OF INTERNAL ASSMBLIES, IF REQUIRED. CONTRACTOR SHALL PROVIDE ACCESS PANELS WHERE REQUIRED TO ALLOW ACCESS, EVEN IF NOT INDICATED ON THE DRAWINGS AT NO ADDITIONAL COST TO OWNER.

WIND RESISTANCE: ALL EQUIPMENT, APPLIANCE AND SUPPORTS LOCATED EXTERIOR OF THE FACILITY SHALL BE INSTALLED TO RESIST WIND LOADS AS DETAILED IN THE BUILDING CODE.

CUTTING AND PATCHING: ALL OPENINGS AROUND DUCT OR PIPE PENETRATIONS THROUGH SMOKE OR FIRE RATED FLOORS, CEILINGS OR WALLS SHALL BE SEALED AIRTIGHT WITH MATERIALS HAVING A RATING EQUAL TO THE MATERIAL OF THE WALL, CEILING OR FLOOR PENETRATED.

EQUIPMENT TAGS: ALL EQUIPMENT WILL HAVE A PERMANENTLY FIXED TAG CORRESPONDING TO THE EQUIPMENT TAG ON THE ENGINEER'S DRAWINGS.

FIRESTOPPING: UL APPROVED MATERIALS AND METHODS SHALL PROTECT THE PENETRATIONS OF FIRE AND/OR SMOKE RATED WALLS, CEILINGS OR FLOORS. THE RATING OF THE FIRESTOPPING SHALL EQUAL THE RATING OF THE RATED ASSEMBLY. ALL INSULATION SHALL HAVE COMPOSITE FIRE AND SMOKE HAZARD RATINGS AS TESTED BY PROCEDURE ASTM E-84, NFPA-225, UL-723 NOT EXCEEDING:
FLAME SPREAD 25 SMOKE DEVELOPED 50 FUEL DISTRIBUTED 50
ACCESSORIES SUCH AS ADHESIVE, MASTIC, CEMENTS AND TAPES SHALL HAVE THE SAME COMPONENT RATING AS LISTED ABOVE.

SERVICE AND PERMITS: CONTRACTOR SHALL MAKE ALL ARRANGEMENTS WITH UTILITY COMPANIES FOR SERVICE AND CONNECTIONS AND SHALL PAY FOR PERMITS.

SHOP DRAWINGS: EACH TRADE SHALL PREPARE AND SUBMIT SHOP DRAWINGS IN ACCORDANCE WITH PROCEDURES OUTLINED IN DIVISION 1. RESPONSIBILITY FOR ERRORS OR OMISSIONS IN THE SUBMITTALS SHALL NOT BE RELIEVED BY THE ARCHITECT'S OR ENGINEER'S REVIEW. ENGINEER'S PROCESSING WILL NOT CONSTITUTE A COMPLETE CHECK BUT WILL INDICATE ONLY THAT A GENERAL METHOD OF CONSTRUCTION AND DETAILING IS SATISFACTORY. AT A MINIMUM SUBMITTALS SHALL INCLUDE FIXTURES, VALVES, PIPING, INSULATION AND ACCESSORIES.

START-UP: CONTRACTOR SHALL STARTUP ALL EQUIPMENT AND FOLLOW THE MANUFACTURER'S START-UP PROCEDURES.

OPERATING AND MAINTENANCE DATA: SUBMIT THREE COPIES OF MANUFACTURER'S OPERATING AND MAINTENANCE INSTRUCTIONS AND SPARE PARTS LIST FOR EACH PIECE OF EQUIPMENT.

SUPPLEMENTARY SUPPORTS: CONTRACTOR SHALL PROVIDE ALL SUPPLEMENTARY STEEL REQUIRED TO SUSPEND MECHANICAL EQUIPMENT AND MATERIALS, IN ORDER TO PROVIDE A "VIBRATION-FREE" RIGID INSTALLATION.

DIELECTRIC UNIONS: PROVIDE DIELECTRIC UNIONS OR FLANGES AT CONNECTIONS OR CONTACT BETWEEN PIPES OF DISSIMILAR METALS.

WATER PIPING: INSIDE WATER LINES SHALL BE HARD-DRAWN COPPER TUBING, TYPE "L" ABOVE-GROUND, TYPE "K" BELOW-GROUND. PROVIDE DIELECTRIC UNIONS WHERE DISSIMILAR METAL ARE IN CONTACT. ALL BURIED PIPING SHALL BE PROTECTED FROM CORROSION WITH 3/8" THICK FOAM RUBBER INSULATION WITH SEAMS SEALED WATERTIGHT. WATER PIPING SHALL BE TYPE-L COPPER TUBING, WITH WROUGHT COPPER FITTINGS (ASTM-B88). CONTRACTOR SHALL PROVIDE FOR EXPANSION AND CONTRACTION OF TUBING. TUBING SHALL BE SLEEVED AT PENETRATION OF CONCRETE SLABS OR WALLS.

EXPOSED PIPING: EXPOSED PIPING SHALL BE POLISHED CHROMIUM ON EITHER BRASS OR BRONZE. PROVIDE ADA INSULATED WATER AND WASTE LINE COVERINGS FOR WALL HUNG SINKS AND LAVATORIES.

VALVES: ALL VALVES SHALL HAVE A MINIMUM OF 125 PSIG WORKING PRESSURE. VALVES AND COCKS MAY NOT BE INDICATED IN EVERY INSTANCE ON THE DRAWINGS, BUT WHETHER OR NOT SHOWN, ALL VALVES, COCKS AND CHECK VALVES NECESSARY FOR THE PROPER OPERATION OF THE SYSTEM SHALL BE FURNISHED AND INSTALLED. INSTALL ISOLATION/SHUT-OFF VALVES AT ALL MAIN RISERS, AND MAIN BRANCH TAKEOFFS. INSTALL ISOLATION/SHUT-OFF VALVES ON EACH INLET AND OUTLET OF EACH PIECE OF EQUIPMENT. PROVIDE A FLANGE OR UNION BETWEEN THE VALVE AND THE EQUIPMENT TO PERMIT DISCONNECTION, REMOVAL AND SERVICE.

STERILIZATION OF DOMESTIC WATER SYSTEM: THE ENTIRE DOMESTIC WATER DISTRIBUTION SYSTEM SHALL BE THOROUGHLY STERILIZED AS REQUIRED BY THE HEALTH AUTHORITY OR WATER PURVEYOR HAVING JURISDICTION, OR IN THE ABSENCE OF A PRESCRIBED METHOD, THE PROCEDURE DESCRIBED IN EITHER AWWA C651 OR AWWA C652, OR AS DESCRIBED IN SECTION 610 FBC-P (2023).

VENTING: THE STACKS SHALL BE EXTENDED THROUGH ROOF OF BUILDING TO POINTS NOT LESS THAN 12" ABOVE ROOF. VENTS SHALL BE OFFSET AS REQUIRED TO PENETRATE ROOFS AT LEAST 3 FEET FROM THE RIDGE OR EDGE OF BUILDING AND 10 FEET FROM ANY FRESH AIR INTAKE OR OPERABLE WINDOW OR DOOR.

SANITARY, WASTE, GREASE, STORM AND VENT PIPING: ALL BELOW AND ABOVE GROUND PIPING AND FITTINGS SHALL BE SCHEDULE 40 PVC-DWV. (SOLID CORE) SLOPE OF SANITARY OR DRAINAGE PIPING 2-1/2" AND SMALLER SHALL BE A MINIMUM OF 1/4" PER FOOT; PIPING 3" AND LARGER SHALL BE SLOPED A MINIMUM OF 1/8" PER FOOT. CLEANOUTS WILL BE LOCATED NOT MORE THAN 100 FEET APART AND AT EACH CHANGE OF DIRECTION GREATER THAN 45° ALONG THE HORIZONTAL DRAIN. CLEANOUTS SHALL BE INSTALLED AT BASE OF EACH STACK. CONCEALED CLEANOUTS SHALL HAVE CAST BRASS CHROMIUM PLATED FLAT ACCESS COVER PLATE.

PLUMBING FIXTURES AND TRIM: PLUMBING FIXTURES SHALL BE FURNISHED AND INSTALLED IN A NEAT AND WORKMANLIKE MANNER WITH PROPER CONNECTIONS TO SUPPLY AND DRAINAGE PIPING. ALL FIXTURES SHALL BE FREE OF FLAWS AND DEFECTS OF ANY SORT IN MATERIAL AND WORKMANSHIP AND SHALL OPERATE PERFECTLY WHEN INSTALLED IN ACCORDANCE WITH MANUFACTURER'S DIRECTIONS. CONTRACTOR SHALL PROVIDE ROUGH-IN, AND SHALL CONNECT ALL FIXTURES TO THE PLUMBING SYSTEMS. ALL FIXTURES TO BE PROVIDED WITH CHROME-PLATED SUPPLIES AND STOPS. PROVIDE 17 GAUGE CHROME-PLATED BRASS TRAPS FOR ALL FIXTURES WITHOUT INTEGRAL TRAPS. PROVIDE CONCEALED ARM CARRIERS AND SUPPORTS FOR ALL FIXTURES REQUIRING SAME.

TESTING: TEST ALL WASTE AND VENT PIPING FOR A PERIOD OF NOT LESS THAN 8 HOURS BY CAPPING OR PLUGGING. ALL JOINTS TO A LEVEL OF THE HIGHEST FIXTURE OR FITTINGS. FILLING THE SYSTEM WITH WATER, AND OBSERVING FOR LEAKS. TEST WATER PIPING AT 100 PSIG FOR A PERIOD OF 8 HOURS, OBSERVING FOR ANY VISIBLE LEAKS. TEST PIPING AGAIN WITH FIXTURES INSTALLED. REPAIR ANY LEAKS FOUND BY REMAKING JOINT. DO NOT USE CAULKING OR SIMILIAR METHODS TO CORRECT LEAKS. UPON REPAIRING ANY LEAKS FOUND. AGAIN TEST THAT PORTION OF THE SYSTEM AS DESCRIBED ABOVE.

EQUIPMENT FURNISHED BY OTHERS: WHERE SHOWN ON THE DRAWINGS, THE CONTRACTOR SHALL MAKE ALL PIPING CONNECTIONS TO EQUIPMENT FURNISHED BY OTHERS. THIS WORK SHALL INCLUDE FURNISHING AND INSTALLATION OF ALL WATER AND DRAIN PIPING. ALL WORK SHALL BE PERFORMED IN ACCORDANCE WITH RECOMMENDATIONS OF EQUIPMENT MANUFACTURER.

GUARANTEE: THE ONE-YEAR GUARANTEE PERIOD SHALL NOT START UNTIL THE PROJECT IS FULLY COMPLETED AND THE CONTRACTOR HAS RECEIVED THE FINAL PAYMENT AND CERTIFICATION OF COMPLETION. ALL EQUIPMENT AND ALL WORK SHALL BE FULLY GUARANTEED, PARTS AND LABOR, FOR ONE YEAR FROM THE DATE OF THE CERTIFICATE OF COMPLETION. REPAIRS MADE DURING THIS PEROID MUST BE FULLY GUARANTEED FOR AN ADDITIONAL ONE YEAR PERIOD FROM THE DATE OF REPAIRS. IN ADDITION, THE CONTRACTOR SHALL ASSUME FULL RESPONSIBILITY FOR ANY DAMAGE TO THE BUILDING, AND ITS CONTENTS OR OTHER EQUIPMENT, CAUSED BY DEFECTS OR IMPROPER INSTALLATION OF EQUIPMENT OR MATERIAL INSTALLED.

SUBSTITUTIONS: CONTRACTOR SHALL PAY FOR ANY AND ALL ADDED COSTS ASSOCIATED WITH ANY SUBSTITUTION, INCLUDING SUBSTITUTIONS THAT REQUIRE CHANGES TO THE OTHER BUILDING COMPONENTS, SUCH AS ELECTRICAL, STRUCTURAL REINFORCING, CEILINGS, WALLS, ROOFS, ETC. THIS WILL INCLUDE ANY ENGINEERING/ARCHITECTURAL RE-DESIGN COSTS AS A RESULT OF SAID SUBSTITUTION. THESE COSTS SHALL NOT BE BORNE BY THE OWNER, ARCHITECT, NOR ENGINEER, REGARDLESS OF ACCEPTABILITY OF SUBSTITUTION. ENGINEER RESERVES THE RIGHT TO ACCEPT OR DENY ANY SUBSTITUTION THAT HE DOES NOT DEEM TO BE EQUIVALENT, AND CONTRACTOR SHALL PROVIDE SPECIFIED OR EQUIVALENT MATERIALS/EQUIPMENT AT NO ADDITIONAL COST TO OWNER, SHOULD A SUBSTITUTION BE DENIED.

PLUMBING LEGEND

DESCRIPTION	ABBREV.	SYMBOL
SANITARY PIPING	SAN	
GREASE PIPING	GR	GR
VENT PIPING	V	
DOMESTIC COLD WATER	CW	
DOMESTIC HOT WATER	HW	
BALL/ISOLATION VALVE	BV	
DUAL-CHECK BACKFLOW PREVENTER		
GRADE CLEAN OUT	COTG	COTG
FLOOR CLEAN OUT	FCO	FCO
PIPE TURNING UP		
PIPE TURNING DOWN		
CAPPED PIPING		
BELOW FINISHED FLOOR	BFF	
TYPICAL ITEM	TYP	

NOTE ON ROOF DRAINAGE:

ALL ROOF DRAINAGE DESIGNED BY ARCHITECT. REFER TO ARCHITECTURAL PLANS FOR SIZES, QUANTITIES AND LOCATIONS OF GUTTERS, ROOF DRAINS, SCUPPERS, DOWNSPOUTS, ETC.

NOTE ON SITE UTILITIES:

CONTRACTOR SHALL FIELD VERIFY LOCATIONS & INVERTS OF ALL UTILITY MAINS (I.E. SEWER, DOMESTIC WATER, ETC.) PRIOR TO ANY INSTALLATION OR CONSTRUCTION. ADVISE ENGINEER OF ANY DISCREPANCIES BEFORE PROCEEDING ANY FURTHER.

NOTE: PLEASE REFER TO CIVIL ENGINEER'S UTILITY PLANS FOR FURTHER REFERENCE AND CONTINUATIONS BEYOND 5-FT FROM BUILDING. FIELD COORDINATE WITH SITE CONTRACTOR PRIOR TO ANY INSTALLATION OF UNDERGROUND PIPING.

DOMESTIC WATER SERVICE REQUIREMENTS:

THE DOMESTIC WATER SERVICE SHALL BE A MINIMUM OF 50 PSI AND NO GREATER THAN 65 PSI DYNAMIC PRESSURE AT THE POINT OF BUILDING ENTRY. IF THE SERVICE STATIC IS OVER 65 PSI, A PRESSURE REDUCING VALVE SHALL BE PROVIDED BY THE SHELL CONTRACTOR. IF THE PRESSURE IS UNDER 50 PSI AT THE POINT OF ENTRY, A PACKAGED BOOSTER PUMP SHALL BE PROVIDED AND INSTALLED. (SEPARATE LINE ITEM PRICES REQUIRED WITH BID FOR BOOSTER PUMP & PRV)

IMMEDIATELY UPON INSTALLATION OF THE WATER SERVICE TO THE BUILDING, THE PLUMBING CONTRACTOR SHALL PERFORM A PRESSURE TEST. SHOULD THE PRESSURE NOT MEET THE ABOVE STATED CRITERIA, THE GENERAL CONTRACTOR SHALL PROVIDE RESULTS TO THE ARCHITECT AT THE EARLIEST POSSIBLE DATE. THE ARCHITECT WILL THEN PROVIDE THE NECESSARY DESIGN REMEDIES TO THE CONTRACTOR FOR PRICING, PERMIT AND CONSTRUCTION, IF LINE ITEM BOOSTER PUMP PACKAGE SPECIFIED IS NOT SUFFICIENT.

NOTE:
BOOSTER PUMP SHALL ONLY BE INSTALLED WHERE REQUIRED DUE TO INADEQUATE WATER PRESSURE. REFER TO SPECIFIC TENANT REQUIREMENTS ON SHEET P1.0.

FWH Architects
3336 Grand Blvd. Suite 201
Holiday, Florida 34690
Ph. 727. 815. 3336
Fax 727. 815. 3337

TO THE BEST OF THE KNOWLEDGE OF THE ARCHITECTS AND ENGINEERS, SAID PLANS AND SPECIFICATIONS COMPLY WITH THE APPLICABLE MINIMUM BUILDING CODES AND THE APPLICABLE MINIMUM FIRE SAFETY STANDARDS

MATTHEW D. LEWIS LICENSE No 56189 STATE OF FLORIDA PROFESSIONAL ENGINEER

no.	date	revision descriptions

STARBUCKS
SHELL CONSTRUCTION
1990 STATE ROAD 19
TAVARES, FL

03.25.2024
date

24007
comm. no.

PLUMBING NOTES & SPECIFICATIONS

P1.0

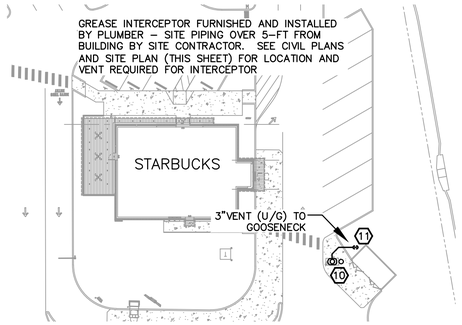

PLUMBING SITE PLAN

SCALE: NONE

KEY NOTES ON PLANS:

1. 4"GREASE WITH CLEANOUT 5–FT INSIDE EXTERIOR WALL LABELED "GREASE" (PROVIDE MAXIMUM DEPTH INVERT – MINIMUM 27" BFF).
2. 4"SANITARY WITH CLEANOUT 5–FT INSIDE REAR WALL (MIN 27" BFF).
3. DOMESTIC COLD WATER (CW) FROM METER TO BUILDING. THEN ROUTE UP INSIDE BUILDING TIGHT TO WALL WITH BALL VALVE AT 24"AFF, AND HINGED ACCESS PANEL IN DRYWALL, THEN UP WITHIN ROOF FRAMING.
4. EXTEND 2"CW WITHIN ROOF FRAMING TO BOOSTER PUMP # BP–1.
5. HANG BOOSTER PUMP TIGHT BELOW ROOF FRAMING.
6. PROVIDE 1–1/2" CW VALVED END WITH CAP FROM BP–1 WITHIN ROOF FRAMING.
7. ROUTE 3/4"CW PIPING BEFORE BP–1, UP WITHIN ROOF FRAMING TO EACH HOSE BIBB.
8. VTR LOCATED 10–FT FROM ALL FRESH AIR INTAKES. EXTEND DOWN INTO BUILDING TO A MINIMUM OF 12" BELOW ROOF. CAP TEMPORARILY IF INDICATED ON PLANS. EXTEND VTR'S WITHIN SCREEN WALL TO ABOVE TOP OF WALL – WHERE APPLICABLE.
9. SEE CIVIL FOR CONTINUATION 5–FT FROM BUILDING.
10. HYDRO–MECHANICAL GREASE INTERCEPTOR & SCHIER SV10 SAMPLE PORT PER DETAILS ON PLANS, LOCATE PER CIVIL ENGINEERING UTILITY PLAN. PLUMBER TO PROVIDE & INSTALL.
11. ROUTE 3"VENT FROM GREASE INTERCEPTOR UP TO GOOSENECK FITTING IN LANDSCAPED AREA (GOOSENECK OUTLET TO BE 12" ABOVE GRADE)

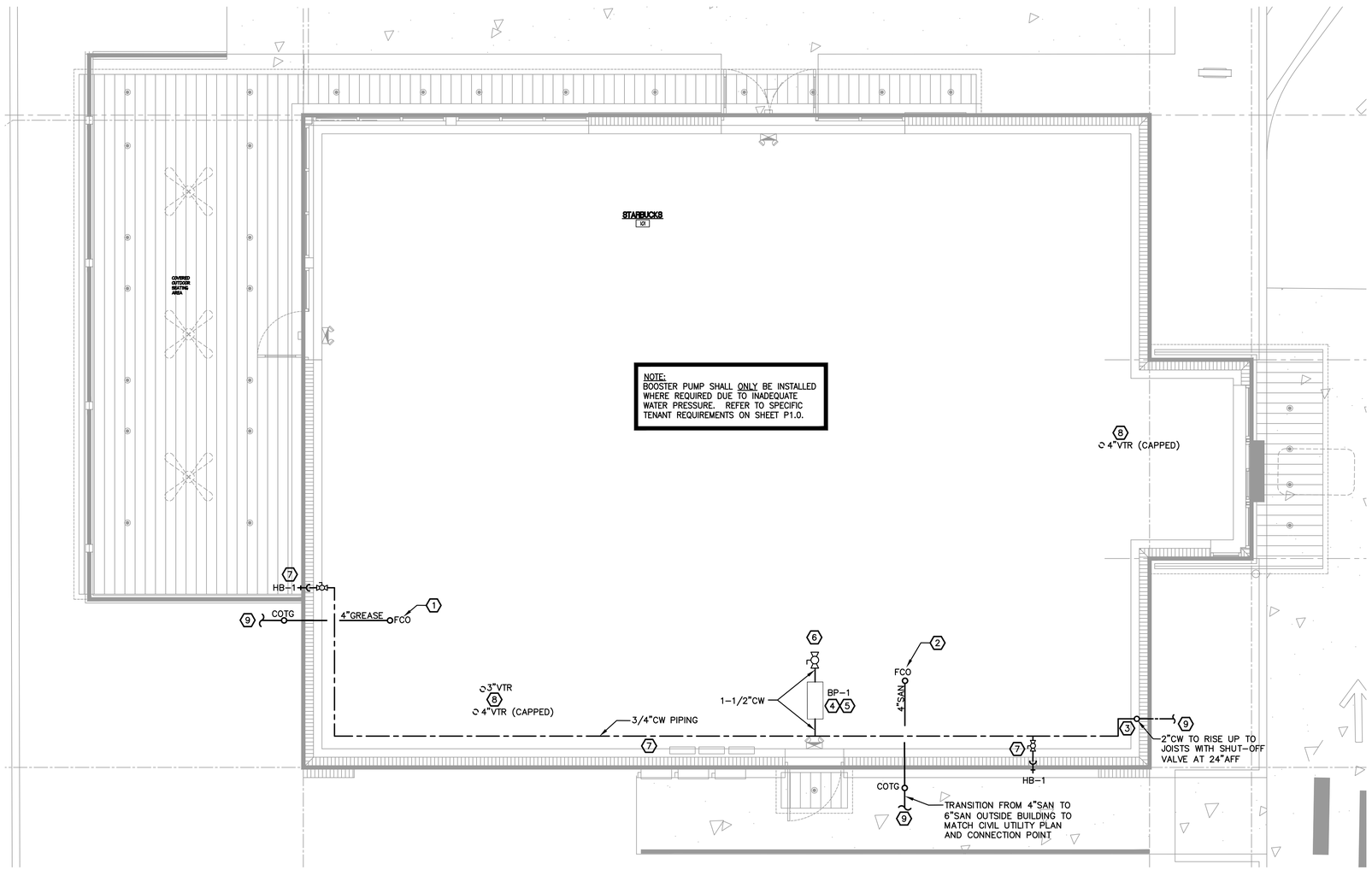

PLUMBING FLOOR PLAN

SCALE: 1/4" = 1'-0"

NORTH

STEPANEK–LEWIS AND ASSOCIATES
2257 TWELVE OAKS WAY, SUITE 103
WESLEY CHAPEL, FL 33544
PH (813) 991–1248
REGISTRY # 8397
24-019
MATTHEW D. LEWIS, P.E. FL LIC#56189

FWH Architects
3336 Grand Blvd. Suite 201
Holiday, Florida 34690
Ph. 727. 815. 3336
Fax 727. 815. 3337

TO THE BEST OF THE KNOWLEDGE OF THE ARCHITECTS AND ENGINEERS, SAID PLANS AND SPECIFICATIONS COMPLY WITH THE APPLICABLE MINIMUM BUILDING CODES AND THE APPLICABLE MINIMUM FIRE SAFETY STANDARDS.

MATTHEW D. LEWIS LICENSE No 56189 STATE OF FLORIDA PROFESSIONAL ENGINEER

no.	date	revision descriptions

STARBUCKS
SHELL CONSTRUCTION
1990 STATE ROAD 19
TAVARES, FL

03.25.2024
date

24007
comm. no.

PLUMBING FLOOR PLAN

P2.0

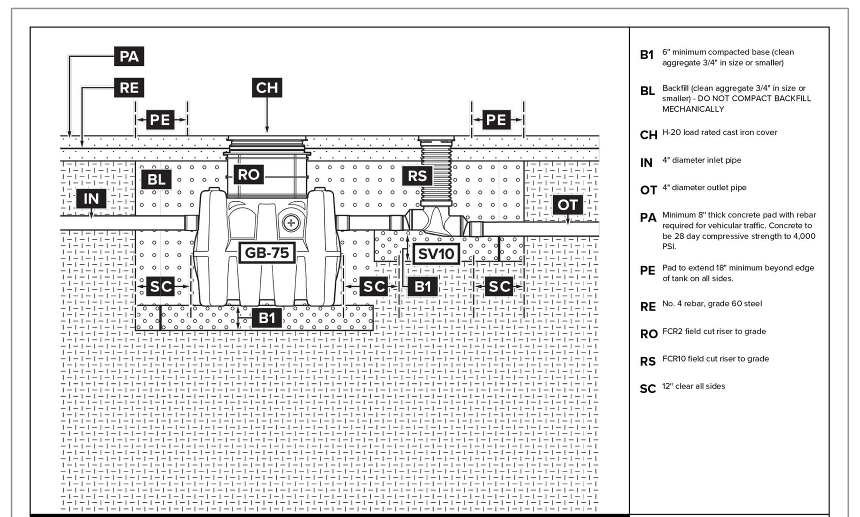

GB-75 GREASE INTERCEPTOR 75 GPM, 4" PLAIN/FPT CONNECTIONS, H-20 RATED PICKABLE CAST IRON COVER

SV10 SEWER VIEWER SAMPLING PORT, 4" CONNECTIONS (FIELD MODIFIABLE TO 6"), POLYETHELENE COVER

Disclaimer: this Detail represents manufacturer directed guidance regarding the grease interceptor system. The contents of this document are not a substitute for local jurisdiction requirements and plumbing code standards. Please follow all local ordinances when installing.

SCHIER

GREASE INTERCEPTOR SIZING:

THE PLUMBING ENGINEER OF RECORD FOR THE SHELL HAS ESTIMATED THE SIZE OF THE GREASE INTERCEPTOR BASED ON THE TENANT'S PROPOSED USE. THE UNIT SPECIFIED SHALL BE THE BASIS OF THE CONTRACTOR'S BIDS. PRIOR TO CONSTRUCTION, STARBUCKS WILL PROVIDE A COMPLETE SET OF INTERIOR FINISH–OUT PLANS THAT WILL INCLUDE SIZING OF GREASE INTERCEPTOR. FOR THIS REASON, THE SIZE SHOWN ON THE SHELL DOCUMENTS ARE SUBJECT TO CHANGE. UNDER NO CIRCUMSTANCES SHALL THE CONTRACTOR SUBMIT SHOP DRAWINGS OR ORDER GREASE INTERCEPTOR UNTIL THE INTERIOR FINISH–OUT DOCUMENTS HAVE BEEN FINALIZED. THE ARCHITECT SHALL IMMEDIATELY NOTIFY THE GENERAL CONTRACTOR UPON RECEIPT AND, AT THAT TIME, WILL MAKE HIM AWARE OF ANY NECESSARY CHANGES.

THE GREASE INTERCEPTOR LOCATION IS PER THE CIVIL ENGINEER'S PLANS. GREASE INTERCEPTOR TO BE FURNISHED AND INSTALLED BY PLUMBING CONTRACTOR.

GREASE INTERCEPTOR CALCULATIONS

Reference No. 64239 — Project Name: Coffee Shop - Tavares, FL (105144-001)

Step 1: Flow rate to grease interceptor

Fixture flow rate: (cu in / 231) = gal x 0.75 / 2 min = 2 min flow rate

NAME	TYPE	DIMENSIONS	QTY	CU IN	FLOW RATE
3 Comp (13700)	3 Compartment Sink	16" x 19" x 14" (3)	1	12,768	20.73 GPM
Advansys (15186)	Dishwasher (Undercounter)	5 gal.	1	1,155	2.5 GPM
Countertop Rinser (22768)	Bar Sink One Bowl	26" x 9" x 12"	2	5,616	9.12 GPM
Floor Drain	Floor Drain	N/A	3	N/A	0 GPM
Floor Sink	Floor Sink	N/A	1	N/A	0 GPM
Hand Sink (14688)	Hand Sink	10" x 14" x 5"	1	700	1.13 GPM
Hand Sink (17809)	Hand Sink	10" x 6" x 5"	1	300	0.49 GPM
Ice Machine (10294)	Floor Sink	N/A	1	N/A	0 GPM
Mop Sink (10995)	Mop Basin	24" x 24" x 10"	1	5,760	9.35 GPM
Rinse Drop-In (10549)	Bar Sink One Bowl	12" x 20" x 14"	1	3,360	5.45 GPM
Rinse Drop-In (22630)	Pre-Rinse Sink One Bowl	27" x 26" x 14"	1	9,828	15.95 GPM
Water Filling Station (18743)	Floor Sink	N/A	1	N/A	0 GPM
Total					**64.72 GPM**

Step 2: Grease Production

Servings per day x Grease production value x Days between pump-outs = Grease output

Servings per day: 1000
Grease production value: 0.005 lbs per serving (Coffee Shop: Low / No flatware)
Days between pump-outs: 90 days

1000 x 0.005 x 90 = 450 lbs of FOG

SCHIER MODEL	
GB-75	**Description:** GREASE INTERCEPTOR 75 GPM, 4" PLAIN/FPT CONNECTIONS, H-20 RATED PICKABLE CAST IRON COVER **Dimensions:** Length: 47", Width: 33", Height: 39.75" **Flow Rate/Grease Capacity:** 75 GPM / 861 lbs **Liquid Capacity:** 125 gal

SPECIFICATIONS

Notes:
1. 4" FPT inlet/outlet with 4" plain end adapters, single inlet and triple outlet.
2. Unit weight - w/ cast iron covers: 190 lbs. (For wet weight add 1,043 lbs.)
3. Maximum operating temperature: 150º F continuous
4. Capacities - Liquid: 125 gal.
   Grease: 861 lbs. (118 gal.) @75 GPM
   Solids: 31 gal.
5. For gravity drainage applications only.
6. Do not use for pressure applications.
7. Cover placement allows full access to tank for proper maintenance.
8. Vent not required unless per local code.
9. Engineered inlet and outlet diffusers with inspection ports are removable to inspect / clean piping.
10. Integral air relief / Anti-siphon / Sampling access.
11. Adjustable cover adapter provides up to 4" of additional height.
12. Designed for below-grade, above-grade, indoor and outdoor installations.
13. Safety Star®, access restrictor built into cover adapter, prevents accidental entry to tank (450 lb rating).

ENGINEER SPECIFICATION GUIDE

Schier Great Basin™ grease interceptor model # GB-75 shall be lifetime guaranteed and made in USA of seamless, rotationally-molded polyethylene with minimum 3/8" uniform wall thickness. Interceptor shall be furnished for above or below-grade installation with adjustable cover adapter, Safety Star® access restrictor built into each cover adapter, and three outlet options. Interceptor shall be certified to ASME A112.14.3 (Type D) and CSA B481.1. Interceptor flow rate shall be 75 GPM. Interceptor grease capacity shall be 861 lbs. Cover shall provide water/gas-tight seal and have minimum 16,000 lbs. load capacity.

CERTIFIED PERFORMANCE

Great Basin™ hydromechanical grease interceptors are third party performance-tested and listed by IAPMO to ASME #A112.14.3 and CSA B481.1 grease interceptor standards and greatly exceed requirements for grease separation and storage. They are compliant to the Uniform Plumbing Code and the International Plumbing Code.

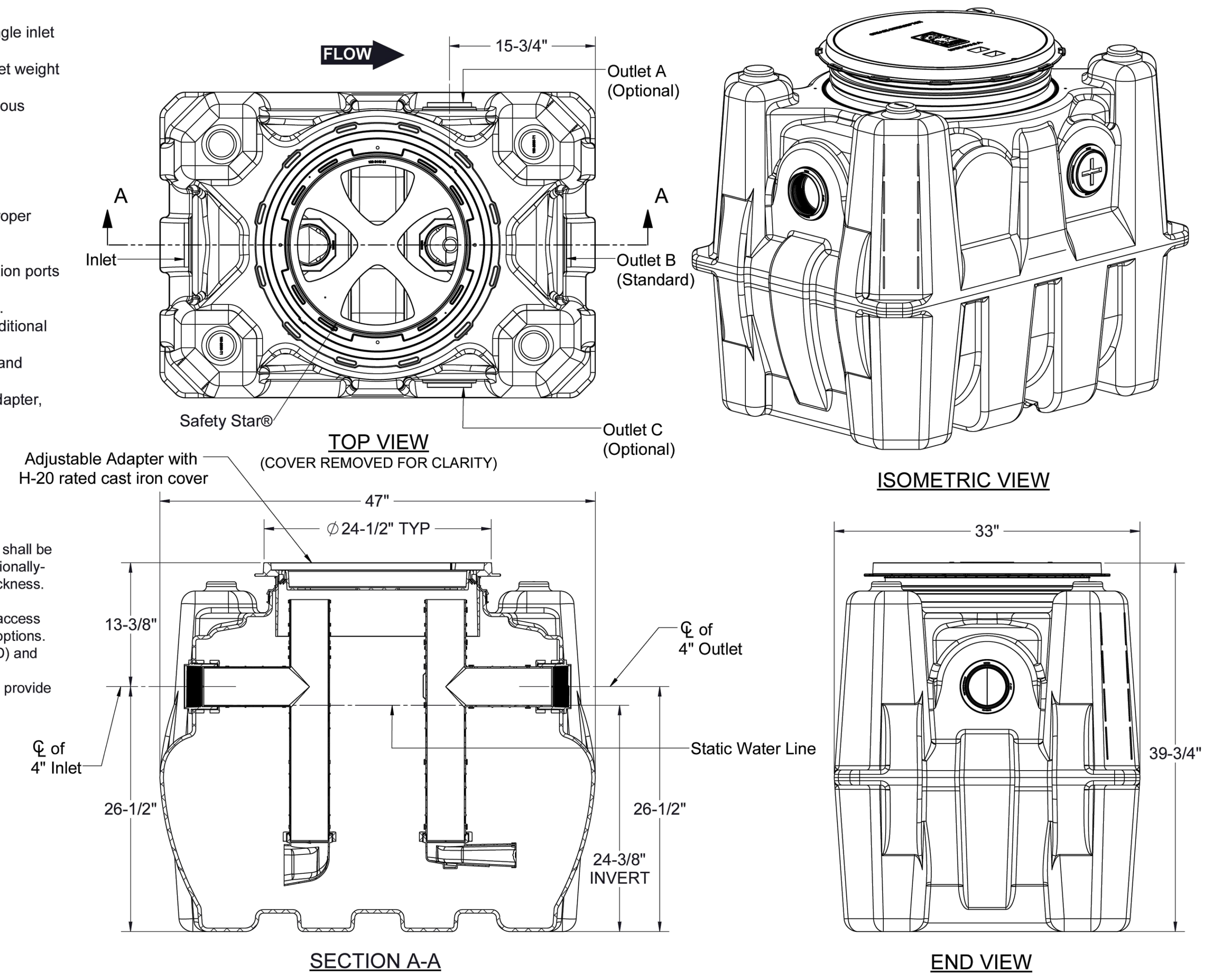

Type D certification does not require a flow control

SPECIFICATION SHEET		
MODEL NUMBER: GB-75	PART NUMBER: 4045-007-02	SCHIER 6455 Woodland Dr Shawnee, KS 66218 Tel: 913-951-3300 Fax: 913-951-3399 schierproducts.com
PROPRIETARY AND CONFIDENTIAL	DESCRIPTION: GB-75 GREASE INTERCEPTOR 75 GPM, 4" INLET/OUTLET, H-20 RATED CAST IRON COVER	
	DWG BY: C. BUSENITZ DATE: 4/14/2022 REV: - ECO: -	

PROVIDE BOTH WITH H–20 TRAFFIC RATED LID AND RISERS AS NECESSARY TO MATCH INSTALLATION INVERT.

NOTES
1. 4" plain end inlet/outlet
2. Field modifiable to 6" plain end inlet/outlet
3. Unit weight - 9 lbs.
4. Maximum operating temperature: 150º F continuous
5. Offset connections
6. 2 rolls of 33" x 2" butyl mastic tape provided for sealing build-your-own riser joints

ENGINEER SPECIFICATION GUIDE

Schier Sewer Viewer™ sampling port model # SV10 shall be lifetime guaranteed and madein USA of seamless, rotationally-molded polyethylene. Sampling port shall be furnished for above or below grade installation. Cover shall provide water/gas-tight seal and have minimum 16,000 lbs. load capacity.

ACCESSORIES:
- Field Cut Risers for extending cover to grade

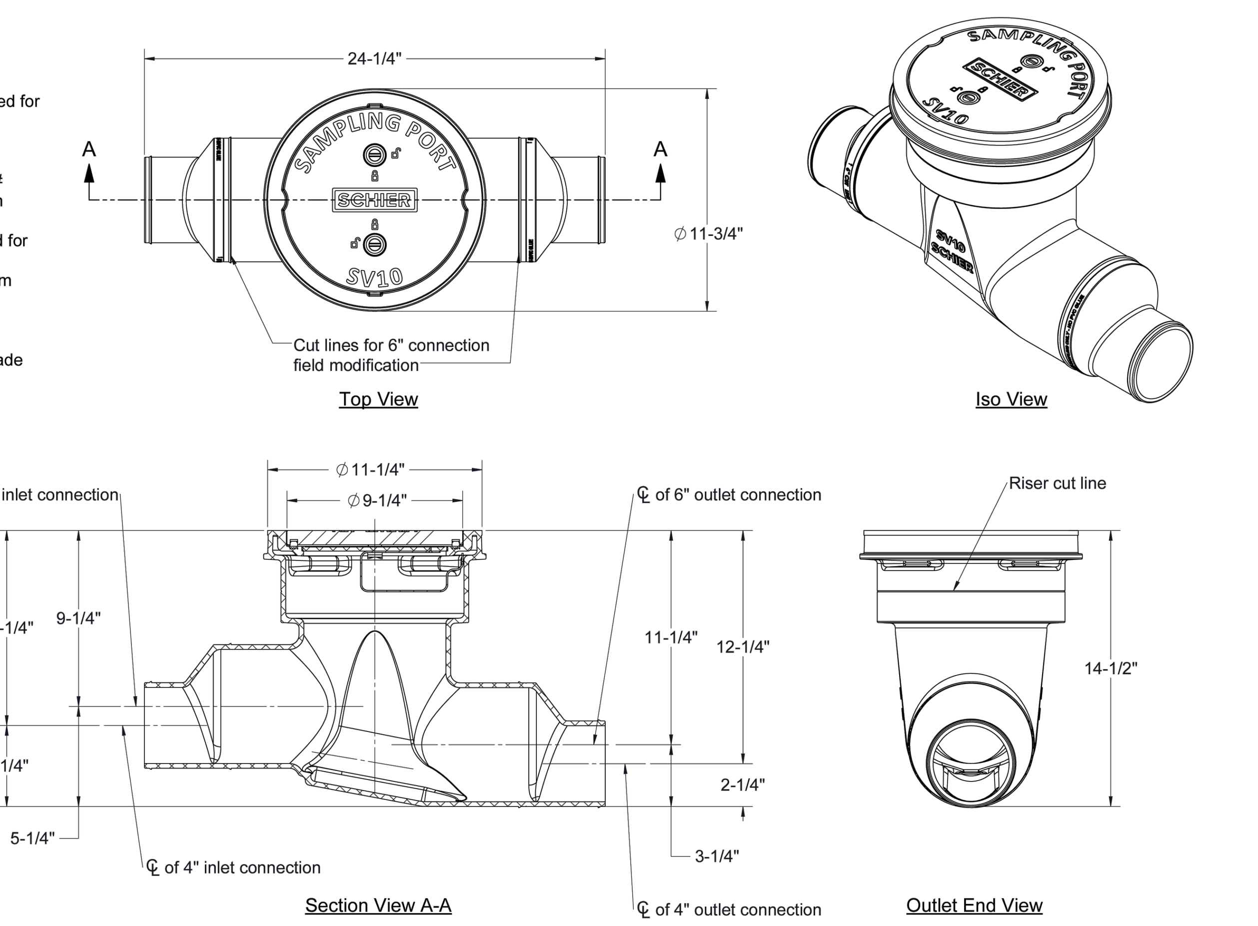

SPECIFICATION SHEET		
MODEL NUMBER: SV10	PART NUMBER: 8065-001-01	SCHIER 6455 Woodland Dr Shawnee, KS 66218 Tel: 913-951-3300 Fax: 913-951-3399 schierproducts.com
PROPRIETARY AND CONFIDENTIAL	DESCRIPTION: SV10 SEWER VIEWER SAMPLING PORT, 4" CONNECTIONS (FIELD MODIFIABLE TO 6"), POLYETHELENE COVER	
	DWG BY: B.BROWN DATE: 6/6/2022 REV: - ECO: -	

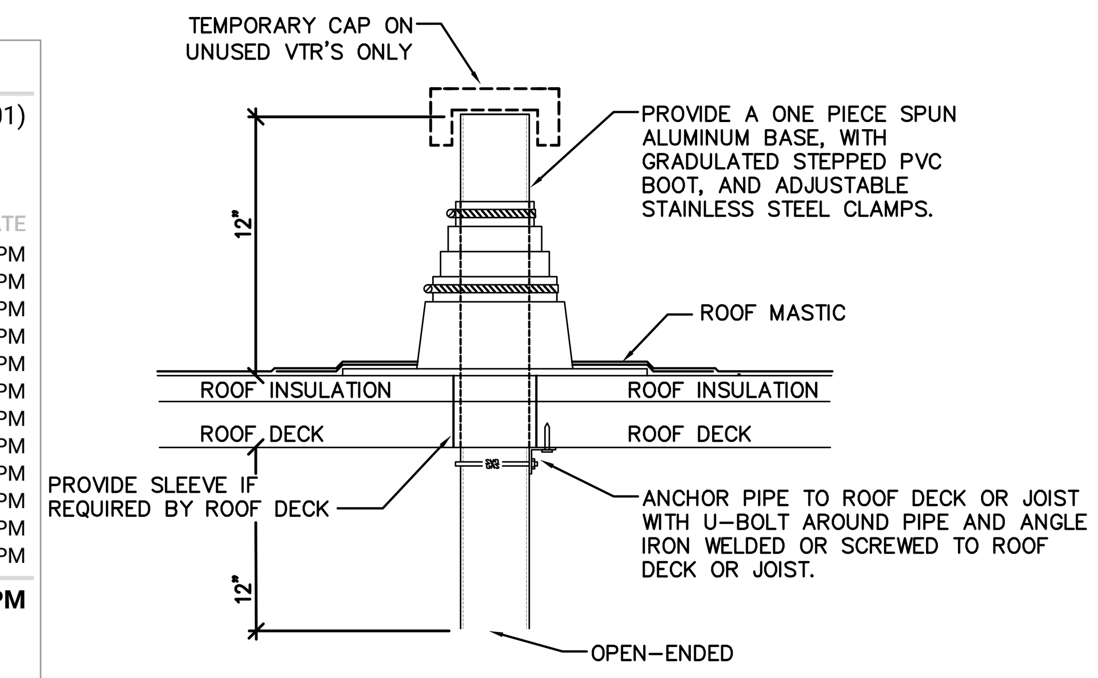

VENT THRU ROOF DETAIL
SCALE: NONE

REFER TO PLANS FOR VTR LOCATIONS. PROVIDE MINIMUM OF 10 FT FROM ALL FRESH AIR INTAKES. PROVIDE 1" FIBERGLASS INSULATION WITH ALL–SERVICE JACKET ON VENT PIPE INSIDE OF BUILDING WITHIN 6 FT OF VTR LOCATION. COORDINATE AND VERIFY FLASHING AND COUNTER FLASHING WITH ROOFING CONTRACTOR.

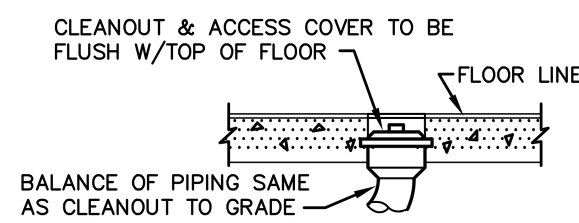

FLOOR CLEANOUT (FCO)
SCALE: NONE

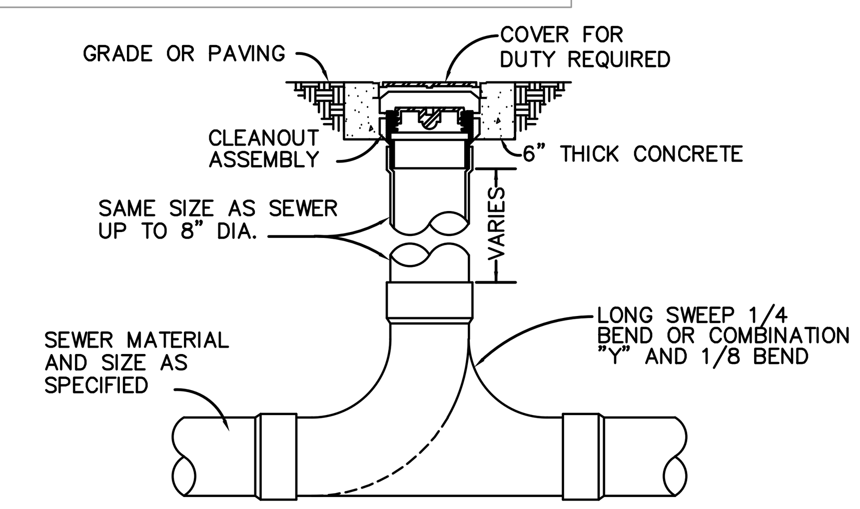

2-WAY GRADE CLEANOUT DETAIL (COTG)
SCALE: NONE

TYPICAL PLUMBING SYSTEM WITH BYPASS OPTION

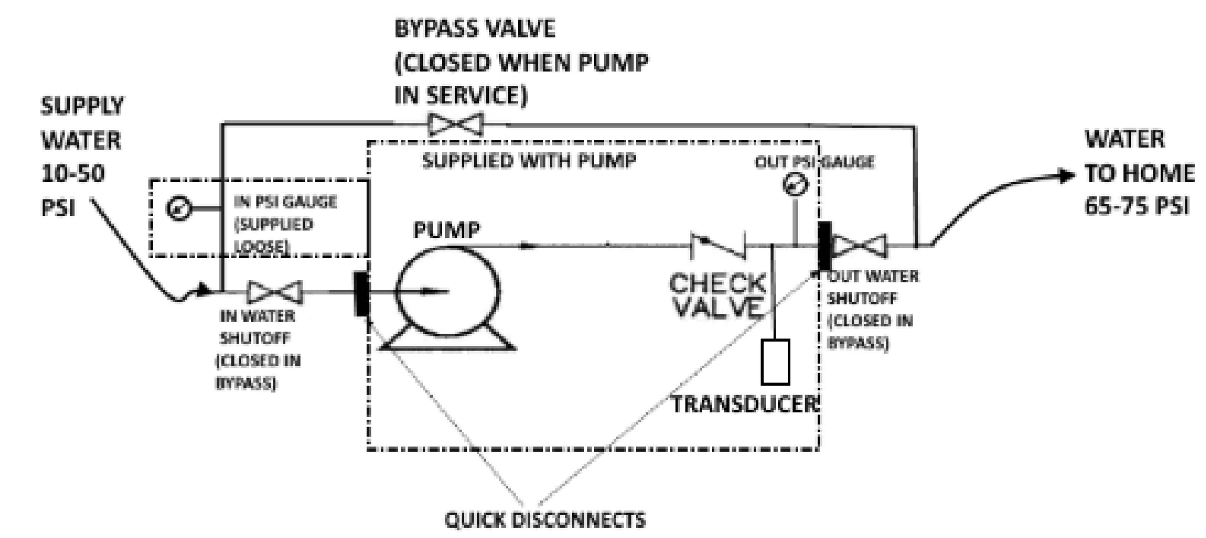

NOTE: MOUNT FROM BEAMS WITH (2) UNISTRUT, 1/2" RODS, AND BEAM CLAMPS

PACKAGED BOOSTER SYSTEM SCHEMATIC
SCALE: NONE

FIXTURE & CONNECTION SCHEDULE

FIXTURE	TAG	BRANCH SIZE				MANUFACTURER/MODEL	REMARKS
		DRAINAGE		WATER			
		WASTE	VENT	COLD	HOT		
FLOOR CLEANOUT	FCO	--	--	--	--	ZURN # Z1400–ZB	"LEVEL–TROL" ADJUSTABLE FLOOR CLEANOUT, DURA–COATED CAST–IRON, POLISHED BRONZE TOP, ADJUSTABLE TO FLOOR FINISH.
HOSE BIBB	HB–1	--	--	3/4"	--	WOODFORD # B65	HOSE BIBB: FREEZELESS WALL HYDRANT, FLUSH WALL BOX, POLISHED BRASS FACE PLATE, BRONZE CASING, HOSE CONNECTION WITH INTEGRAL VACUUM BREAKER, WHEEL HANDLE. T–KEY FOR BOX.
BOOSTER PUMP PROVIDE SEPARATE LINE ITEM PRICE	BP–1	--	--	2"	--	PERFECT PRESSURE PUMP # P3–3HP NOTE :ONLY REQUIRED IF SITE PRESSURE CANNOT MEET TENANT MINIMUM PRESSURE IN LEASE.	SEPARATE LINE ITEM – PACKAGED DOMESTIC WATER PRESSURE BOOSTER SYSTEM. SYSTEM TO INCLUDE 3–HP MOTOR AT 208–VOLTS/1–PHASE, PROVIDING 46–PSI BOOST, 50–GPM. PROVIDE ALL COMPONENTS NECESSARY FOR COMPLETE INSTALLATION INCLUDING, BUT NOT LIMITED TO: UNIONS, BALL VALVES, DIGITAL PRESSURE/SPEED CONTROLLER, AND PRESSURE REDUCING VALVES.

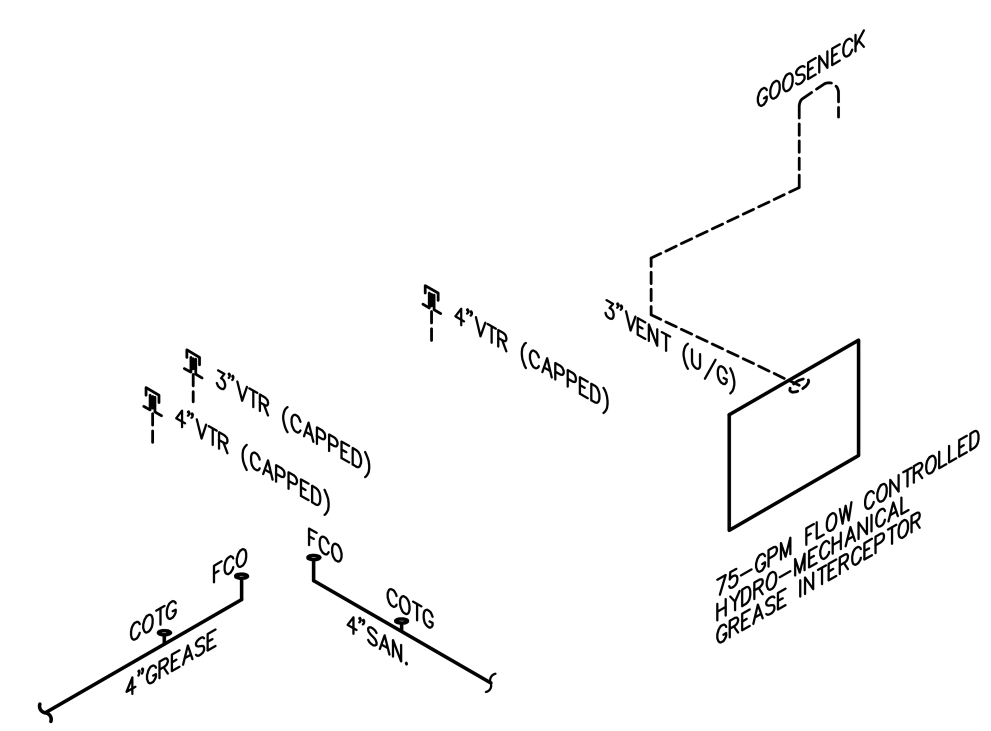

TOTAL DRAINAGE FIXTURE UNITS ALLOWABLE PER FBC-P TABLE 710.1(1) = 180 DFU AT 1/8" PER FOOT SLOPE.

SANITARY ISOMETRIC RISERS
SCALE: NONE

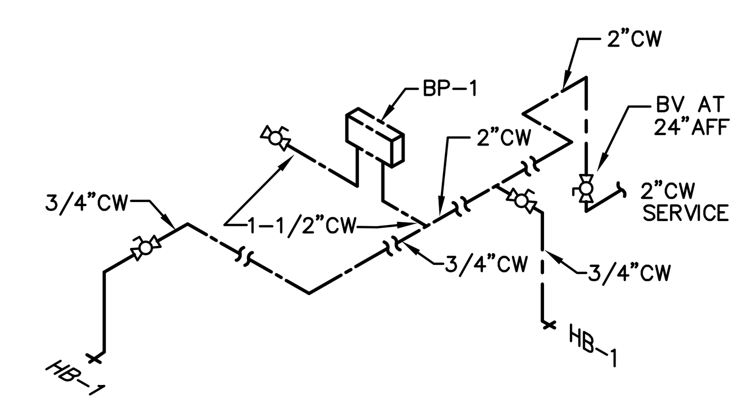

NOTE: BP–1 TO BE MOUNTED TIGHT BELOW JOISTS

TOTAL WATER FIXTURE UNITS ALLOWABLE PER FBC-P TABLE E201.1 = 151 WFU NOT MORE THAN 200–FT

WATER ISOMETRIC RISER
SCALE: NONE

STEPANEK–LEWIS AND ASSOCIATES
2257 TWELVE OAKS WAY, SUITE 103
WESLEY CHAPEL, FL 33544
PH (813) 991–1248
REGISTRY # 8397
24-019
MATTHEW D. LEWIS, P.E. FL LIC#56189

FWH Architects
3336 Grand Blvd. Suite 201
Holiday, Florida 34690
Ph. 727. 815. 3336
Fax 727. 815. 3337

TO THE BEST OF THE KNOWLEDGE OF THE ARCHITECTS AND ENGINEERS, SAID PLANS AND SPECIFICATIONS COMPLY WITH THE APPLICABLE MINIMUM BUILDING CODES AND THE APPLICABLE MINIMUM FIRE SAFETY STANDARDS

MATTHEW D. LEWIS LICENSE No 56189 STATE OF FLORIDA PROFESSIONAL ENGINEER

no.	date	revision descriptions

STARBUCKS
SHELL CONSTRUCTION
1990 STATE ROAD 19
TAVARES, FL

03.25.2024
date
24007
comm. no.

PLUMBING SCHEDULES, RISERS & DETAILS

P3.0

PROJECT NOTES

ELECTRICAL

1. ALL WORK SHALL CONFORM TO:
   A. FLORIDA BUILDING CODE (FBCB) 2023- 8th EDITION.
   B. FLORIDA FIRE PREVENTION CODE (FFPC) 2021 - 8th EDITION.
   C. FLORIDA BUILDING CODE ENERGY CONSERVATION (FBCEC) 2023 - 8th EDITION.
   D. NATIONAL ELECTRIC CODE (NEC) - 2020 EDITION.
2. ALL MATERIALS SHALL BE NEW AND OF DOMESTIC ORIGIN AND SHALL BEAR UNDERWRITERS' LABEL WHERE APPLICABLE.
3. ALL WORK SHALL BE PERFORMED BY A LICENSED ELECTRICAL CONTRACTOR IN A FIRST-CLASS WORKMANLIKE MANNER. THE COMPLETED SYSTEM IS TO BE FULLY OPERABLE AND ACCEPTANCE OF THIS SYSTEM BY THE ENGINEER/ARCHITECT MUST BE A CONDITION OF THE SUB CONTRACT.
4. ALL WORK TO BE COORDINATED WITH OTHER TRADES TO AVOID INTERFERENCE WITH THE PROGRESS OF CONSTRUCTION.
5. CONTRACTOR TO GUARANTEE ALL MATERIALS AND WORKMANSHIP FREE FROM DEFECTS FOR A PERIOD OF NOT LESS THAN ONE (1) YEAR FROM DATE OF ACCEPTANCE.
6. CORRECTION OF ANY DEFECTS TO BE COMPLETED WITHOUT ADDITIONAL CHARGE AND TO INCLUDE REPLACEMENT OR REPAIR OF ANY OTHER PHASE OF THE INSTALLATION WHICH MAY HAVE BEEN DAMAGED THEREBY.
7. ALL REQUIRED INSURANCE TO BE PROVIDED FOR PROTECTION AGAINST PUBLIC LIABILITY OF PROPERTY DAMAGE FOR THE DURATION OF THE WORK.
8. CONTRACTOR TO PAY FOR ALL PERMITS, UTILITY FEES, INSPECTIONS AND TESTING.
9. ELECTRICAL INSTALLATION TO MEET ALL STANDARD REQUIREMENTS OF LOCAL POWER AND TELEPHONE COMPANIES.
10. MINIMUM WIRE SIZE SHALL BE #12 AWG, EXCLUDING CONTROL WIRING. UNLESS OTHERWISE NOTED, CONDUCTORS SHALL BE COPPER WITH THWN/THHN INSULATION. CONDUCTORS #12 AND SMALLER MAY BE SOLID; ALL THOSE #10 AND LARGER TO BE STRANDED.
11. ALL UNDERGROUND RACEWAYS SHALL BE GALVANIZED RIGID STEEL CONDUIT OR SCHEDULE 40 PVC OR SCHEDULE 80 PVC. ALL OTHER RACEWAYS TO COMPLY WITH GOVERNING CODES. MINIMUM CONDUIT UNDERGROUND SHALL BE 3/4" CONDUIT UNLESS OTHERWISE NOTED.
12. OUTLET BOXES SHALL BE PRESSED STEEL IN DRY LOCATIONS, CAST ALLOY WITH THREADED HUBS IN WET OR DAMP LOCATIONS, AND BE OF SPECIAL CONSTRUCTION FOR OTHER CLASSIFIED AREAS. ALL BOXES SHALL BE RECESSED (FLUSH) IN WALLS OR CEILINGS WHENEVER POSSIBLE.
13. DISCONNECT SWITCHES SHALL BE H.P. RATED, GENERAL OR HEAVY DUTY WHERE INDICATED, QUICK-MAKE, QUICK-BREAK TYPE. ENCLOSURES SHALL BE AS REQUIRED BY N.E.C. AND LOCATION (WEATHERPROOF, EXPLOSION-PROOF, ETC.).
14. ALL GENERAL PURPOSE SWITCHES AND RECEPTACLES SHALL BE THE PRODUCT OF A SINGLE MANUFACTURER. CATALOG NUMBERS LISTED ARE LEVITON; HOWEVER, COMPARABLE DEVICES BY HUBBELL, PASS & SEYMOUR, OR ARROW HART WILL BE ACCEPTED. COLOR OF DEVICES AND PLATES SHALL BE AS DICTATED BY ARCHITECT/OWNER.
    A. SWITCHES: #1221-2 SERIES.
    B. RECEPTACLES: #T5362 SERIES. (TAMPER RESISTANCE DEVICES)
    C. COVER PLATES: SMOOTH PLASTIC

    NOTE: ALL OTHER REQUIRED DEVICES SHALL MATCH IN COLOR AND STYLE.
15. ALL RACEWAYS AND PIPES, SPACED IN OR THROUGH 1st FLOOR CONCRETE SLAB, SHALL BE SPACED A MINIMUM OF 3" APART AND IN OR THROUGH 2nd FLOOR AND ABOVE CONCRETE SLABS, SHALL BE SPACED A MINIMUM OF 6" APART.
16. IT IS NOT THE INTENT OF THESE PLANS TO SHOW EVERY MINOR DETAIL OF CONSTRUCTION. THE CONTRACTOR IS EXPECTED TO FURNISH AND INSTALL ALL ITEMS FOR A COMPLETE ELECTRICAL SYSTEM, AND PROVIDE ALL NECESSARY DEVICES AND COMPONENTS FOR EQUIPMENT TO BE PLACED IN PROPER WORKING ORDER.
17. ALL ELECTRICAL RACEWAYS (METALLIC AND NONMETALLIC) SHALL HAVE AN EQUIPMENT GROUND CONDUCTOR SIZED IN ACCORDANCE WITH THE 2020 EDITION OF THE N.E.C.
18. LOAD DATA IS BASED ON INFORMATION GIVEN ENGINEER AT THE TIME OF DESIGN. VERIFY ALL EQUIPMENT NAMEPLATE RATINGS BEFORE ORDERING.
19. CIRCUITS SHOWN ON PLANS ARE TO DETERMINE LOAD DATA AND PANEL SIZES. THE CONTRACTOR IS TO PROVIDE CIRCUITS AND ROUTING OF CONDUITS TO SUIT JOB CONDITIONS.
20. FURNISH AND INSTALL DISCONNECT SWITCHES, WIRING, AND CONNECTIONS ON AIR CONDITIONING SYSTEM AS SHOWN ON PLANS. ELECTRICAL CONTRACTOR SHALL VERIFY AND COORDINATE WITH MECHANICAL CONTRACTOR REGARDING SUPPLY AND INSTALLATION OF ALL REQUIRED CONTROLS.
21. ALL SWITCHGEAR SHALL BE THE PRODUCT OF A SINGLE MANUFACTURER. SYSTEM DESIGN IS BASED ON THE SQUARE "D" COMPANY; HOWEVER, COMPARABLE EQUIPMENT BY EATON, G.E., AND SIEMENS WILL BE ACCEPTABLE. TANDEM AND HALF-SPACE CIRCUIT BREAKERS SHALL NOT BE USED. PROVIDE ARC FLASH WARNING SIGNAGE PER N.E.C. 110.16 FOR ALL SWITCHBOARDS AND PANELS.
22. WHERE SPECIFIED, UNDER OTHER NOTES AND SPECIFICATION SECTION, WITHIN THIS DOCUMENT, UNDERGROUND PVC CONDUIT RUNS SHALL HAVE RIGID STEEL ELBOWS AND RIGID STEEL SECTIONS AT SLAB PENETRATIONS. WHERE RIGID STEEL IS USED, IT SHALL BE COMPLETELY COATED WITH AN ALKALI AND RUST-RESISTANT BITUMASTIC PAINT, AND THREADS SHALL BE COATED WITH ZINC CHROMATE.
23. THE ELECTRICAL CONTRACTOR SHALL MEET AND COORDINATE WITH THE LOCAL UTILITY COMPANIES AT THE SITE PRIOR TO CONSTRUCTION. AT THAT TIME, THE CONTRACTOR SHALL COORDINATE ALL RELATED WORK WITH THE UTILITY COMPANIES' REPRESENTATIVES TO MEET THE OWNER'S SCHEDULE.
24. ALL ELECTRICAL CONDUCTORS SHALL BE INSTALLED IN AN APPROVED RACEWAY.
25. CONTRACTOR SHALL BE RESPONSIBLE FOR SEALING ALL CONDUIT PENETRATIONS MADE THROUGH FIRE RATED WALLS, CEILINGS, SLABS, ETC. PENETRATION SEALS SHALL BE PER U.L. ASSEMBLY STANDARDS.
26. CONDUIT SYSTEM REQUIREMENTS:

    UNDERGROUND - PVC WITH RIGID 90 THROUGH SLAB - WHERE REQUIRED IN OTHER SECTION OF THIS DOCUMENT.
    ABOVE FINISH FLOOR, CEILINGS, ETC. (INDOOR) - EMT WITH DIECAST SET SCREW FITTINGS.
    GALVANIZED RIGID CONDUITS - ABOVE GRADE AND WHERE SUSCEPTIBLE TO PHYSICAL DAMAGE.
    FLEXIBLE CONDUITS - INDOOR, ONLY SHORT RUNS NOT TO EXCEED 6'-0".
    SEALTITE - OUTDOOR, ONLY SHORT RUNS NOT TO EXCEED 6'-0".
    MC CABLE - ONLY AS APPROVED ELSEWHERE IN THIS DOCUMENT.
27. CONDUCTOR COLOR CODING:

    THE FOLLOWING APPLICABLE COLOR CODES SHALL BE IMPLEMENTED AND POSTED IN ALL PANELS, DISCONNECT SWITCHES, ETC., PER NEC ARTICLES 200.6(D) AND 215.12:

	120/240V., 1-PH.	120/208V., 3-PH.	277/480V., 3-PH.
PHASE 'A'	BLACK	BLACK	BROWN
PHASE 'B'	RED	RED	ORANGE
PHASE 'C'	-	BLUE	YELLOW
NEUTRAL	WHITE	WHITE	GRAY
GROUND	GREEN	GREEN	GREEN
ISOL. GROUND	GREEN/YELLOW	GREEN/YELLOW	-

28. GFI RECEPTACLES

    ALL RECEPTACLES WITHIN SIX FEET OF A WATER SOURCE SHALL BE A GFI RECEPTACLE OR PROTECTED BY A GFI BREAKER PER NFPA 70 (NEC) ARTICLE 210.8. THIS NOTE APPLIES TO ALL SHEETS.
29. PROVIDE ALL REQUIRED 0-10V WIRING TO 0-10V DIMMABLE FIXTURES AND CONTROLS AS REQUIRED. THIS 0-10V LOW VOLTAGE WIRING IS NOT SHOWN ON PLANS FOR DRAWING CLARITY. 0-10V WIRING SHALL BE TYPE COMPATIBLE WITH THE FIXTURE DIMMING DRIVER TYPE (CLASS 1 OR 2). CONTRACTOR SHALL COORDINATE WITH MANUFACTURER FOR CABLE TYPE, SIZE, AND INSTALLATION REQUIREMENT AND COMPLY ACCORDINGLY. ALL WIRING SHALL BE IN COMPLIANCE WITH N.E.C. ARTICLE 725.
30. ALL OUTDOOR RECEPTACLES SHALL BE WEATHER RESISTANCE RATED, GFI-TYPE WITH "WET WHILE IN USE" COVERS.
31. WHERE WIRE SIZES ARE SHOWN ON PLANS OR IN PANEL SCHEDULE, THE SAME WIRE SIZE, AS A MINIMUM, SHALL BE CARRIED THROUGHOUT THE CIRCUIT UNLESS SPECIFICALLY NOTED OTHERWISE ON PLANS.
32. THERE SHALL BE NO MORE THAN (6) SIX CURRENT CARRYING CONDUCTORS IN ANY ONE CONDUIT, UNLESS SPECIFICALLY NOTED OTHERWISE ON THE PLANS.

N1B

MC CABLE NOTES

MC CABLE: METAL-CLAD CABLE GENERAL NOTES

- BRANCH CIRCUITS MAY BE METAL CLAD CABLE TYPE (MC), PROVIDED:
- WHERE PANEL IS FLUSH MOUNTED:
  THE CABLE SHALL RUN IN WALL CAVITY.

  WHERE PANEL IS SURFACE MOUNTED:
  CONTRACTOR SHALL PROVIDE METAL STUDS WITH DRYWALL TO CREATE A CAVITY TO RUN THE MC CABLE WITHIN.
- MC CABLE MAY BE USED FOR 20 AMP CIRCUITS IN WALLS OR ABOVE ACCESSIBLE CEILINGS.
- MC CABLE WIRE GAUGES SHALL BE AS SHOWN ON PANEL SCHEDULE.
- MC CABLE SHALL ONLY BE USED WHERE ALLOWED BY N.E.C. SECTION 330.10, WHERE APPROVED BY THE BUILDING OFFICIAL, AND ACCEPTED BY THE OWNER.
- MC CABLE SHALL BE INSTALLED PER N.E.C. 330.
- ALL CABLE RUNS SHALL BE CONCEALED FROM VIEW AND ROUTED PARALLEL AND PERPENDICULAR TO BUILDING LINES.
- MC CABLE MAY NOT BE USED IN OPEN STRUCTURE AREA, EXPOSED, OR OTHERWISE VISIBLE TO CUSTOMERS.
- NO MC CABLE CAN BE USED IN DAMP OR WET LOCATIONS.

N43B

2023 FLORIDA BUILDING CODE, ENERGY CONSERVATION (8TH EDITION)

SECTION C405.5 ELECTRIC POWER

C405.5.3 VOLTAGE DROP
THE CONDUCTORS FOR FEEDERS AND BRANCH CIRCUITS COMBINED ARE DESIGNED AND SIZED FOR A MAXIMUM OF 5% VOLTAGE DROP TOTAL.

C405.5.4.1 DRAWINGS
CONSTRUCTION DOCUMENTS SHALL REQUIRE THAT WITHIN 30 DAYS AFTER THE DATE OF SYSTEM ACCEPTANCE, RECORD DRAWINGS OF THE ACTUAL INSTALLATION SHALL BE PROVIDED TO THE BUILDING OWNER, INCLUDING:

1. A SINGLE-LINE DIAGRAM OF THE BUILDING ELECTRICAL DISTRIBUTION SYSTEM AND
2. FLOOR PLANS INDICATING LOCATION AND AREA SERVED FOR ALL DISTRIBUTION.

C405.5.4.2 MANUALS
CONSTRUCTION DOCUMENTS SHALL REQUIRE THAT AN OPERATING MANUAL AND MAINTENANCE MANUAL BE PROVIDED TO THE BUILDING OWNER. THE MANUALS SHALL INCLUDE, AT A MINIMUM, THE FOLLOWING:

1. SUBMITTAL DATA STATING EQUIPMENT RATING AND SELECTED OPTIONS FOR EACH PIECE OF EQUIPMENT REQUIRING MAINTENANCE.
2. OPERATION MANUALS AND MAINTENANCE MANUALS FOR EACH PIECE OF EQUIPMENT REQUIRING MAINTENANCE. REQUIRED ROUTINE MAINTENANCE ACTIONS SHALL BE CLEARLY IDENTIFIED.
3. NAMES AND ADDRESSES OF AT LEAST ONE QUALIFIED SERVICE AGENCY.

SECTION C408 SYSTEM COMMISSIONING

C408.3.1 FUNCTIONAL TESTING:

1. PRIOR TO PASSING FINAL INSPECTION, THE REGISTERED DESIGN PROFESSIONAL SHALL PROVIDE EVIDENCE THAT THE LIGHTING CONTROL SYSTEMS HAVE BEEN TESTED TO ENSURE THAT CONTROL HARDWARE AND SOFTWARE ARE CALIBRATED, ADJUSTED, PROGRAMMED AND IN PROPER WORKING CONDITION IN ACCORDANCE WITH THE CONSTRUCTION DOCUMENTS AND MANUFACTURER'S INSTRUCTIONS. FUNCTIONAL TESTING SHALL BE IN ACCORDANCE WITH SECTIONS C408.3.1.1 THROUGH C408.3.1.3 FOR THE APPLICABLE CONTROL TYPE.

C408.3.2 DOCUMENTATION REQUIREMENTS:

1. THE CONSTRUCTION DOCUMENTS SHALL SPECIFY THAT DOCUMENTS DESCRIBED IN THIS SECTION BE PROVIDED TO THE BUILDING OWNER'S AUTHORIZED AGENT WITHIN 90 DAYS FROM THE DATE OF RECEIPT OF THE CERTIFICATE OF OCCUPANCY.

N40A

NOTES

GENERAL

1. REFER TO ARCHITECTURAL REFLECTED CEILING PLAN AND INTERIOR ELEVATIONS FOR COORDINATION OF ALL LIGHTING FIXTURE LOCATIONS.
2. GROUND CONDUCTOR SHALL BE INSTALLED IN ENTIRE RACEWAY SYSTEM INCLUDING WALL SWITCHES AND FLEXIBLE CONDUIT TO LIGHT FIXTURES.
3. LIGHTING SWITCHES SHALL BE GROUPED WITH ONE PLATE AND LOCATED APPROXIMATELY 2 INCHES FROM DOOR FRAME (STRIKE SIDE) UNLESS OTHERWISE NOTED.

N23A

LEGEND

ELECTRICAL

MOUNTING HEIGHTS SHOWN ARE MAXIMUM/MINIMUM HANDICAPPED ACCESSIBILITY STANDARDS - THEY SHALL NOT BE ALTERED WITHOUT WRITTEN AUTHORIZATION.

NOT ALL DEVICES SHOWN IN LEGEND ARE REQUIRED. REVIEW POWER AND LIGHTING PLANS AND DETAILS FOR ITEMS WHICH APPLY TO THIS PROJECT.

	LINEAR LIGHT FIXTURE, LETTER INDICATES TYPE
B	DOWNLIGHT LIGHT FIXTURE, LETTER INDICATES TYPE
C	WALL BRACKET LIGHT FIXTURE, LETTER INDICATES TYPE
	LIGHT FIXTURE WITH 90 MINUTE EMERGENCY BATTERY.
	EXIT LIGHT (ARROW INDICATES DIRECTION)
	BATTERY POWERED EMERGENCY LIGHT
	(1) HEAD REMOTE EXTERIOR MOUNTED EMERGENCY LIGHT.
	(2) HEAD REMOTE EXTERIOR MOUNTED EMERGENCY LIGHT.
	TRACK LIGHTING
S a	SINGLE POLE SWITCH, LOWER CASE LETTER INDICATES LIGHT CONTROLLED, MOUNT 48" A.F.F. U.O.N.
S 2	DOUBLE POLE SWITCH, MOUNT 48" A.F.F. U.O.N.
S 3	THREE-WAY SWITCH, MOUNT 48" A.F.F. U.O.N.
S 4	FOUR-WAY SWITCH, MOUNT 48" A.F.F. U.O.N.
S P	SINGLE POLE SWITCH WITH PILOT LIGHT, MOUNT 48" A.F.F. U.O.N.
S K	KEY OPERATED SINGLE POLE SWITCH, MOUNT 48" A.F.F. U.O.N.
S F	FAN CONTROLLER, MOUNT 48" A.F.F. U.O.N.
S D	DIMMER SWITCH, TYPE AS NOTED, MOUNT 48" A.F.F. U.O.N.
	INDUSTRIAL SPECIFICATION GRADE SINGLE RECEPTACLE, AMPS AS NOTED, MOUNT 18" A.F.F. U.O.N.
	INDUSTRIAL SPECIFICATION GRADE DUPLEX RECEPTACLE, MOUNT 18" A.F.F. U.O.N.
	INDUSTRIAL SPECIFICATION GRADE DUPLEX RECEPTACLE, MOUNT ABOVE COUNTER HEIGHT U.O.N.
	INDUSTRIAL SPECIFICATION GRADE QUADRAPLEX RECEPTACLE, MOUNT 18" A.F.F. U.O.N.
	INDUSTRIAL SPECIFICATION GRADE DUPLEX RECEPTACLE, HORIZONTALLY MOUNTED.
30A	1 PH, 250V. RECEPTACLE, AMPS AS NOTED, MOUNT 18" A.F.F. U.O.N.
H	SPECIAL RECEPTACLE AS NOTED
	INDUSTRIAL SPECIFICATION GRADE FLOOR MOUNTED DUPLEX RECEPTACLE
GFI	INDUSTRIAL SPECIFICATION GRADE GROUND FAULT INTERRUPTER RECEPTACLE, LEVITON #69362-HT, WITH WEATHER & TAMPER RESISTANCE, MOUNT ABOVE COUNTER HEIGHT U.O.N.
I.G.	INDUSTRIAL SPECIFICATION GRADE DUPLEX RECEPTACLE, ISOLATED GROUND TYPE, LEVITON #T5362-IG MOUNT AT 18" A.F.F. U.O.N.
	INDUSTRIAL SPECIFICATION GRADE DUPLEX RECEPTACLE, SPLIT WIRED, MOUNT 18" A.F.F. U.O.N.
HPR	DUPLEX RECEPTACLE, WEATHER, TAMPER RESISTANCE AND GFI RATED, LEVITON #69362-HT, WITH WEATHERPROOF BOX AND COVER. MOUNT AT 18" A.F.F. U.O.N.
USB	20 AMP DUPLEX RECEPTACLE WITH (2) USB CHARGING PORTS, TAMPER & WEATHER RESISTANCE. HUBBELL #USB20AC5-xx-WR. MOUNT AT 18" A.F.F. U.O.N.
	TELE/DATA OUTLET, PROVIDE 4" SQ. BOX WITH 1-GANG MUD RING, AND 1" CONDUIT WITH PULL WIRE AND INSULATING BUSHING STUBBED INTO CEILING SPACE. MOUNT ABOVE COUNTER HEIGHT U.O.N.
	TELE/DATA OUTLET, PROVIDE 4" SQ. BOX WITH 1-GANG MUD RING, AND 1" CONDUIT WITH PULL WIRE AND INSULATING BUSHING STUBBED INTO CEILING SPACE. MOUNT BOX 18" A.F.F. U.O.N.
	CONDUIT CONCEALED IN WALL OR ABOVE CEILING WITH CONDUCTORS AS SHOWN ON PANEL SCHEDULE. U.O.N.
	CONDUIT CONCEALED BELOW FLOOR SLAB OR FINISHED GRADE WITH CONDUCTORS AS SHOWN ON PANEL SCHEDULE U.O.N.
	CONDUIT EXPOSED ON WALL OR CEILING WITH CONDUCTORS AS SHOWN ON PANEL SCHEDULE. U.O.N.
TV	TELEVISION SYSTEM EMPTY CONDUIT WITH PULL WIRE
FB	FLEXIBLE CONDUIT NOT TO EXCEED 6 FEET IN LENGTH
DC	D.C. VOLTAGE WIRING (#10 WIRE IN 1/2" CONDUIT)
	WIREMOLD (SIZE AND LENGTH AS NOTED)
	CONDUIT SEAL-OFF FITTING
	PADDLE FAN WITH BACKBOX CAPABLE OF SUPPORTING 100 LB. LOAD
	T.V. CAMERA
TV	T.V. MONITOR
TV	TELEVISION OUTLET, PROVIDE SINGLE GANG BOX WITH 3/4" CONDUIT WITH PULL WIRE AND INSULATING BUSHING STUBBED INTO CEILING SPACE. MOUNT BOX 18" A.F.F. U.O.N.
	DISCONNECT SWITCH
100/3/80	DISCONNECT DESIGNATION (SIZE/POLES/FUSE) "NF" INDICATES NON-FUSED; "DE" INDICATES DUAL ELEMENT FUSES.
	MAGNETIC MOTOR STARTER
	COMBINATION MAGNETIC MOTOR STARTER/DISCONNECT SWITCH
T	DRY TYPE TRANSFORMER
LVC	CONTACTOR (AS NOTED)
TVC	TIME CLOCK
PVC	PHOTOCELL
	MOTOR PERMANENTLY CONNECTED WITH FLEXIBLE CONDUIT
	ELECTRIC DUCT HEATER
T	THERMOSTAT. PROVIDE SINGLE GANG BOX WITH 1/2" CONDUIT STUBBED INTO CEILING SPACE, MOUNT 60" A.F.F. U.O.N. (COORDINATE WITH MECHANICAL DRAWINGS PRIOR TO ROUGH-IN)
	PUSHBUTTON, MOUNT 48" A.F.F. U.O.N.
	DOOR CHIME WITH TRANSFORMER
S	SPEAKER
J	JUNCTION BOX (FLUSH MOUNT IN FINISHED AREAS U.O.N.)
	DEVICE AS NOTED
	TELEPHONE BACKBOARD WITH #6 CU. GROUND (SIZE AS NOTED)
	277/480V, 3-PHASE PANELBOARD
	LIGHTING OR POWER PANELBOARD
	FLOOR MOUNTED TELEPHONE RECEPTACLE
MSB	MAIN SWITCHBOARD
MDP	MAIN DISTRIBUTION PANEL

ABBREVIATIONS

E.G.	EQUIPMENT GROUND	EWC	ELECTRIC WATER COOLER	N.L.	NIGHT LIGHT	A.F.G.	ABOVE FINISH GRADE
I.G.	ISOLATED GROUND	E/F-EF	EXHAUST FAN	PC	PULL CHAIN	U.O.N.	UNLESS OTHERWISE NOTED
WP	WEATHERPROOF	A/H-AHU	AIR HANDLING UNIT	C.T.	CURRENT TRANSFORMER	N.T.S.	NOT TO SCALE
EC	EMPTY CONDUIT	ACC-CU	CONDENSING UNIT	EX	EXISTING DEVICE	N.I.C.	NOT IN CONTRACT
EWH	ELECTRIC WATER HEATER	RTU	ROOF TOP UNIT	RL	EXISTING TO BE RELOCATED	A.F.F.	ABOVE FINISH FLOOR
GFI/GFCI	GROUND FAULT CIRCUIT INTERRUPTER						

NOTE: MOUNTING HEIGHTS NOTED ARE TO CENTERLINE OF DEVICE SHOWN. U.O.N.

NOTES

CONTRACTOR

1. IT IS THE CONTRACTOR'S RESPONSIBILITY TO REVIEW ALL DRAWINGS AND SPECIFICATIONS, INCLUDING BUT NOT LIMITED TO ARCHITECTURAL, STRUCTURAL, MECHANICAL, PLUMBING, AND ELECTRICAL PRIOR TO SUBMITTING A BID.
2. REPORT ANY DISCREPANCIES TO ARCHITECT OR ENGINEER PRIOR TO BID.
3. BIDDERS ARE TO VISIT THE SITE AND FAMILIARIZE THEMSELVES WITH EXISTING CONDITIONS AND SATISFY THEMSELVES AS TO THE NATURE AND SCOPE OF THE WORK.
4. IT IS THE CONTRACTORS RESPONSIBILITY TO VERIFY ALL EXISTING SITE CONDITIONS INCLUDING BUT NOT LIMITED TO, SERVICE LOCATION, SERVICE LAYOUTS, AND TELEPHONE LOCATION., ETC.
5. THE SUBMISSION OF A BID WILL BE EVIDENCE THAT SUCH AN EXAMINATION HAS BEEN MADE. LATER CLAIMS FOR LABOR, EQUIPMENT, OR MATERIALS REQUIRED, OR FOR ANY DIFFICULTIES ENCOUNTERED WHICH COULD HAVE BEEN FORESEEN HAD AN EXAMINATION BEEN MADE, WILL NOT BE ALLOWED.
6. IT IS THE RESPONSIBILITY OF THE CONTRACTOR TO NOTIFY THE ARCHITECT OF ANY DISCREPANCIES ENCOUNTERED ON THE PLANS OR IN EXISTING SITE CONDITIONS PRIOR TO SUBMISSION OF BID.
7. COORDINATE WITH OTHER TRADES FOR ITEMS IN THEIR SCOPE OF WORK WHICH WOULD REQUIRE ELECTRICAL WORK (DISCONNECTION, RECONNECTION, ETC.) AND ARE NOT INDICATED ON ELECTRICAL DRAWINGS.

THESE NOTES APPLY TO ALL ELECTRICAL SHEETS.

N3B

INDEX

SHEET

E0.0 : ELECTRICAL PROJECT NOTES AND LEGEND
E1.0 : ELECTRICAL SITE PLAN
E1.1 : PHOTOMETRIC SITE PLAN
E1.2 : FIXTURE INFORMATION
E2.0 : LIGHTING AND POWER PLANS
E3.0 : POWER RISER DIAGRAM
E4.0 : ELECTRICAL SPECIFICATIONS

CHEHAYEB & ASSOCIATES, INC.
CONSULTING PROFESSIONAL ENGINEERS
3702 AZEELE ST.
TAMPA, FL 33609
(813) 876-1415
www.chehayeb.com
LIC. #49521 SOUHEIL S. CHEHAYEB CERT. #7340
24-30

FWH Architects
3336 Grand Blvd. Suite 201
Holiday, Florida 34690
Ph. 727. 815. 3336
Fax 727. 815. 3337

TO THE BEST OF THE KNOWLEDGE OF THE ARCHITECTS AND ENGINEERS, PLANS AND SPECIFICATIONS COMPLY WITH THE APPLICABLE MINIMUM BUILDING CODES AND THE APPLICABLE MINIMUM FIRE SAFETY STANDARDS

SOUHEIL CHEHAYEB, P.E.
FL License No. 49521

no.	date	revision descriptions

STARBUCKS
SHELL CONSTRUCTION
1990 STATE ROAD 19
TAVARES, FL

03.25.2024
date

24007
comm. no.

ELECTRICAL PROJECT NOTES AND LEGEND

E0.0

3/21/2024 2:05 PM

UTILITY COORDINATION:

TO THE BEST OF OUR ABILITY THE SERVICE HAS BEEN COORDINATED WITH THE UTILITY COMPANY REPRESENTATIVE(S) FOR:

1 - TRANSFORMER(S) LOCATION.
2 - CUSTOMER RESPONSIBILITY.
3 - REQUESTED VOLTAGE & AVAILABILITY.
4 - PRIMARY CONDUITS RESPONSIBILITY AND REQUIREMENT.

IT IS THE CONTRACTOR RESPONSIBILITY TO REVISIT THESE ITEMS WITH UTILITY PROJECT ENGINEER TO VERIFY THAT THE CURRENT DESIGN SHOWN ON THE CONSTRUCTION DOCUMENT(S) ARE STILL IN COMPLIANCE WITH THE UTILITY PLANS TO SERVICE THIS SITE.

ANY COST ASSOCIATED WITH UTILITY FEES SHALL BE THE RESPONSIBILITY OF THE CONTRACTOR TO ADDRESS WITH THE DEVELOPER.

THIS COORDINATION SHALL BE A PART OF SITE MEETING TO BE SCHEDULED BY THE CONTRACTOR WITH THE UTILITY PERSONNEL PRIOR TO THE START OF THE PROJECT.

COORDINATION SHALL ALSO BE MADE WITH TELEPHONE AND CABLE SERVICE REPRESENTATIVE(S) FOR VERIFICATION OF THEIR REQUIREMENTS INCLUDING POINT OF CONNECTION AND TERMINATION POINTS.

N55

NOTES

GENERAL SITE

1. CONDUIT RUN BELOW GRADE SHALL BE PVC SCHEDULE 40. 90° ELBOWS, 2" AND LARGER SHALL BE GALVANIZED RIGID CONDUIT(S). RISERS SHALL BE RIGID STEEL CONDUIT(S) WHERE EXPOSED TO OUTSIDE ELEMENTS, AND SUBJECT TO PHYSICAL DAMAGE. REFER TO SPECIFICATIONS. ALL INDOOR CONDUITS ABOVE SLAB SHALL BE METAL. REFER TO SPECIFICATION.
2. ALL UNDERGROUND SITE CONDUIT SHALL BE BURIED A MINIMUM OF 36 INCHES DEEP BELOW FINISHED GRADE TO TOP OF CONDUIT UNLESS OTHERWISE NOTED.
3. PROVIDE COLOR TAPE FOR IDENTIFICATION AT 18 INCHES DEEP (ABOVE SERVICE CONDUIT RUNS) PER N.E.C. 300-5 (D) (3).
4. ALL TURNS SHALL BE MADE WITH LONG SWEEP ELLS.
5. CONTRACTOR SHALL PROVIDE ALL EXCAVATING AND BACK FILLING REQUIRED FOR ALL NEW WORK INCLUDING FILL, COMPACTION, SURFACE, ETC. TO MEET ALL REQUIREMENTS AS APPLICABLE FOR THE AREA.
6. PRIOR TO THE START OF CONSTRUCTION, CONTRACTOR SHALL DETERMINE THE PRESENCE AND LOCATION OF ANY UNDERGROUND RACEWAYS SUCH AS TELEPHONE, ELECTRIC POWER, WATER, GAS, SEWAGE LINES, ETC. WHETHER PREVIOUSLY EXISTING OR AS INSTALLED BY OTHER TRADES, TO AVOID INTERFERENCE WITH ANY SUCH SYSTEM.
7. ALL SPARE, EMPTY CONDUITS SHALL BE LABELED AS TO THEIR FUNCTION.
8. CONTRACTOR SHALL MAINTAIN AN AS-BUILT DIMENSIONAL DRAWING ON SITE SHOWING ALL UNDERGROUND SERVICE ROUTING AND TERMINATION POINTS.
9. CONTRACTOR SHALL MEET ON SITE WITH REPRESENTATIVES OF THE UTILITY COMPANIES INCLUDING POWER, TELEPHONE, AND CABLE TO DETERMINE THE FOLLOWING: (PRIOR TO BID AND PRIOR TO ROUGH IN).

POWER COMPANY:
A - VERIFY EXACT TRANSFORMER(S) LOCATION PRIOR TO BID.
B - VERIFY PRIMARY CONDUIT WORK REQUIRED AND RESPONSIBILITY PRIOR TO BID.
C - VERIFY METERING METHOD AND REQUIREMENTS, IF DIFFERENT FROM WHAT IS SHOWN ON THE DRAWINGS, NOTIFY ENGINEER IMMEDIATELY.

TELEPHONE COMPANY:
A - ORIGINATION AND TERMINATION OF THE SERVICE CONDUITS.
B - INSTALLATION SPECIFICATIONS, SIZE AND QUANTITY REQUIRED. HOWEVER; MAINTAIN QUANTITY AND SIZES SHOWN ON PLANS, IF IN EXCESS OF UTILITY REQUIREMENTS.

NOTE:
CONTRACTOR'S FAILURE TO COMPLY WITH THESE COORDINATION PROCEDURES WILL CONSTITUTE THE CONTRACTOR ASSUMING ALL COSTS ASSOCIATED WITH REPLACING ANY AND ALL WORK ALREADY IN PLACE TO MEET UTILITY COMPANIES' RULES AND REQUIREMENTS.

N58

UTILITY CONTACTS

POWER COMPANY: SECO ENERGY
ALEJANDRO VELASCO
(352) 661-0479 (C) / (352) 569-4641 (O)
alejandro.velasco@secoenergy.com

TELEPHONE COMPANY: LUMEN
JIM DONALDSON
(407) 374-0491
jim.donaldson@lumen.com

CONTRACTOR SHALL NOTIFY EACH UTILITY COMPANY REPRESENTATIVE LISTED ABOVE OF THE PRE-CONSTRUCTION MEETING SCHEDULE.

KEY NOTES

SITE

1. CLEARANCE BAR. NON-LIT.
2. PROPOSED STARBUCKS PANEL LOCATIONS.
3. PROVIDE ONE 1" CONDUIT WITH PULLWIRE FROM WEATHERPROOF JUNCTION BOX AT PROPOSED SIGN LOCATION AND RUN UNDERGROUND BACK TO "TIME CLOCK/CONTACTOR PANEL". SEE DTE DETAIL THIS SHEET.
4. ELECTRICAL SERVICE LOCATION. SEE POWER RISER DIAGRAM ON SHEET E3.0.
5. SECONDARY POWER CONDUITS, FURNISHED AND INSTALLED BY ELECTRICAL CONTRACTOR. SEE POWER RISER DIAGRAM ON SHEET E3.0.
6. TWO 2" SCH 40, PVC CONDUITS WITH PULLWIRE BY ELECTRICAL CONTRACTOR FOR TELEPHONE SERVICE. CONDUIT TO BE STUBBED UP IN SPACE AT A LOCATION IDENTIFIED BY TENANT.
7. ONE 2" SCH 40, PVC CONDUIT WITH PULLWIRE BY ELECTRICAL CONTRACTOR FOR CABLE T.V. SERVICE. CONDUIT TO BE STUBBED UP IN SPACE AT A LOCATION IDENTIFIED BY TENANT.
8. NEW 120/208V., 3-PHASE, PAD MOUNTED TRANSFORMER. REFER TO POWER RISER DIAGRAM ON SHEET E3.0 FOR ADDITIONAL DETAILS. VERIFY EXACT LOCATION AND REQUIREMENTS WITH UTILITY COMPANY, SEE CONTACT INFORMATION THIS SHEET.
9. PRE MENU BOARD. SEE DTE DETAIL THIS SHEET.
10. SPEAKER POST ORDER CONFIRMATION SYSTEM WITH DETECTABLE LOOP. SEE DTE DETAIL THIS SHEET.
11. MENU BOARD SEE DTE DETAIL THIS SHEET.
12. TERMINATE TELEPHONE CONDUITS AT PROPERTY LINE. COORDINATE WITH PHONE COMPANY REPRESENTATIVE.
13. TERMINATE CABLE CONDUITS AT PROPERTY LINE. COORDINATE WITH UTILITY COMPANY REPRESENTATIVE.
14. TELE/DATA STUB-UP PROPOSED LOCATION. SEE SHEET E2.0 FOR LOCATION.
15. 4 - #8, 1 - #8 E.G. IN 1" CONDUIT.
16. OPTICS ORIENTATION FOR THE SITE LIGHT FIXTURE.
17. SITE POLE AND FIXTURE, SEE LIGHTING FIXTURE SCHEDULE ON THIS SHEET AND SHEET E1.1 FOR POLE DETAIL.
18. ONE CIRCUIT CONTROLLED VIA PHOTOCELL ON TIMECLOCK OFF AND ONE CIRCUIT CONTROLLED VIA PHOTOCELL 'ON', PHOTOCELL 'OFF'.
19. 2 - #8, 1 - #8 E.G. IN 1" CONDUIT.
20. (1) 1" CONDUIT WITH PULL WIRE FROM THE DUMPSTER TO 12" A.F.F. AT PANEL 'A' LOCATION. CAP AND LABEL ON BOTH ENDS.
21. 2-#10, 1-#10 E.G. IN 1" CONDUIT.
22. LIGHT FIXTURE MOUNTED AT 6" BELOW THE TOP OF TRASH ENCLOSURE WALL. SEE FIXTURE SCHEDULE FOR SPECIFICATION. SEE ARCHITECTURAL DUMPSTER ELEVATION FOR EXACT LOCATION OF LIGHT FIXTURE. FIXTURE SHALL BE CONNECTED FROM THE END TO MAINTAIN WET LABEL LISTING OF THE FIXTURE. CONSULT FACTORY FOR WIRING DETAIL AND PROVIDE ACCORDINGLY.

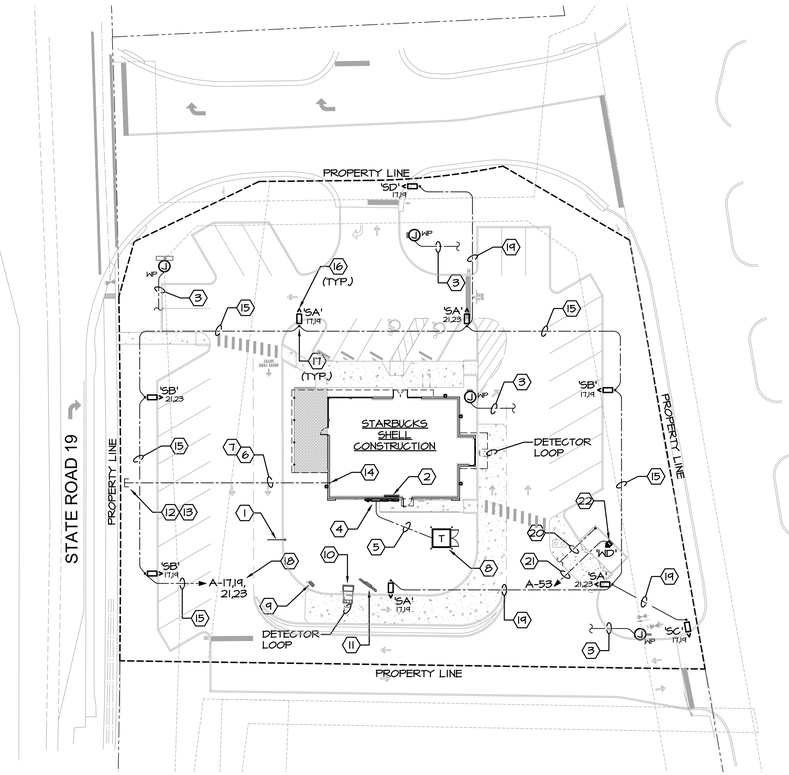

NORTH

ELECTRICAL SITE PLAN

SCALE: 1" = 30'-0"

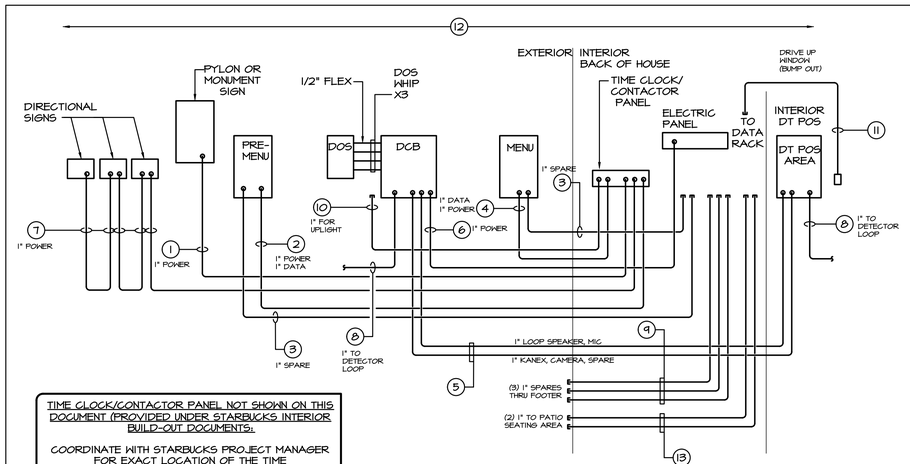

TIME CLOCK/CONTACTOR PANEL NOT SHOWN ON THIS DOCUMENT (PROVIDED UNDER STARBUCKS INTERIOR BUILD-OUT DOCUMENTS.

COORDINATE WITH STARBUCKS PROJECT MANAGER FOR EXACT LOCATION OF THE TIME CLOCK/CONTACTOR PANEL.

PROJECT SCOPE:

THE WORK SHOWN ON THESE DOCUMENTS REPRESENT THE LANDLORD SCOPE OF WORK (MODIFIED SHELL DOCUMENT). ALL INTERIOR WORK INCLUDING INTERIOR LIGHTING, ADDITIONAL PANELS, WIRING, ETC... IS PART OF TENANT IMPROVEMENT DOCUMENT, THAT IS DESIGNED AND PERMITTED SEPARATELY.

DTE CONDUIT SCHEMATIC

NOT TO SCALE

GENERAL NOTE:

PROVIDE PULL WIRE IN ALL EMPTY CONDUITS AND LABEL CONDUITS ACCORDINGLY TO THEIR FUNCTION.

KEY NOTES

1. PROVIDE (1) 1" PVC CONDUIT FOR POWER CONNECTION TO STARBUCKS MONUMENT SIGNAGE. PROVIDE A WEATHERPROOF JUNCTION BOX.
2. PROVIDE (1) 1" PVC CONDUIT FOR POWER CONNECTION TO PRE-MENU SIGN AND (1) 1" PVC CONDUIT WITH PULL STRING CONTINUOUS TO TELEPHONE BOARD FOR DATA CONNECTION. PROVIDE A WEATHERPROOF JUNCTION BOX.
3. PROVIDE (1) 1" PVC CONDUIT FOR FUTURE USE TO MENU SIGN AND TO PRE-MENU SIGN.
4. PROVIDE (1) 1" PVC CONDUIT FOR POWER CONNECTION TO MENU SIGN AND (1) 1" PVC CONDUIT WITH PULL STRING CONTINUOUS TO TELEPHONE BOARD FOR DATA CONNECTION. PROVIDE A WEATHERPROOF JUNCTION BOX.
5. PROVIDE (2) 1" PVC CONDUITS FROM OCS/SPEAKER POST (AKA DOS/DCB) TO DRIVE-THRU WINDOW.
6. PROVIDE (1) 1" PVC CONDUIT FROM OCS/SPEAKER POST (AKA DOS/DCB) TO ELECTRICAL PANEL. PROVIDE A WEATHERPROOF JUNCTION BOX.
7. PROVIDE (1) 1" PVC CONDUIT FOR POWER CONNECTION TO STARBUCKS DIRECTIONAL SIGNAGE. NOTE THAT UP TO THREE DIRECTIONAL SIGNS CAN BE SERVED BY A SINGLE CIRCUIT. ADDITIONAL SIGNS REQUIRE A NEW DEDICATED CIRCUIT AND CONDUIT. PROVIDE A WEATHERPROOF JUNCTION BOX.
8. PROVIDE (1) 1" PVC CONDUIT FOR EACH OF TWO TENANT-FURNISHED DETECTOR LOOP SETS IN COORDINATION WITH TENANT CONSTRUCTION MANAGER.
9. PROVIDE (3) SPARE 1" PVC CONDUIT THRU FOUNDATION WALL OUT REAR OF BUILDING, CAPPED AND TERMINATED ABOVE CEILING. VERIFY LOCATION OF STUB-UP WITH TENANT'S REPRESENTATIVE.
10. PROVIDE (1) 1" PVC CONDUIT TO CANOPY UPLIGHT FROM ELECTRICAL PANEL.
11. PROVIDE (1) 1-1/2" CONDUIT FROM DATA RACK @ MANAGER WORKSTATION TO DRIVE-THRU BUMP.
12. EMPTY CONDUITS WITH PULL WIRE IS PROVIDED UNDER THESE DOCUMENTS. ALL WIRING AND CONTROLS ARE PROVIDED AS PART OF INTERIOR DESIGN DOCUMENTS.
13. PROVIDE (2) 1" PVC CONDUIT TO PATIO AREA FROM ELECTRICAL PANEL.

SITE LIGHTING CONTROLS

SITE LIGHTING IS PROVIDED WITH 50/50 CONTROLS WHERE 50% OF THE LIGHTS REMAIN ON ALL NIGHT PHOTOCELL ON/OFF, AND THE OTHER 50% WILL BE CONTROLLED VIA PHOTOCELL ON AND TIME CLOCK OFF ONE HOUR AFTER CLOSING.

LIGHTING FIXTURE SCHEDULE

SITE

TYPE	MANUF.	CATALOG NO.	VOLT	LAMPS	LOAD (W)	MOUNTING
SA	LITHONIA LIGHTING	DSXI-LED-P6-40K-70CRI-T5M-MVOLT	208	LED	166	SEE SHEET E1.1 FOR POLE DETAIL
SB	LITHONIA LIGHTING	DSXI-LED-P6-40K-70CRI-T4M-MVOLT-HS	208	LED	166	
SC	LITHONIA LIGHTING	DSXI-LED-P2-40K-70CRI-LCCO-MVOLT	208	LED	68	
SD	LITHONIA LIGHTING	DSXI-LED-P2-40K-70CRI-RCCO-MVOLT	208	LED	68	
WD	LITHONIA LIGHTING	DSXWI-LED-10C-1000-40K-T3M-MVOLT-(CBA)-PIRIFC3V	120	LED (4000K)	39	LED WALL PACK AT THE DUMSPTER WITH MOTION/AMBIENT SENSOR

GENERAL NOTES:
1. PROVIDE NECESSARY MOUNTING HARDWARE AND ACCESSORIES FOR ALL FIXTURES.
2. ALL FIXTURE SHOWN ARE DESIGNED TO MATCH OTHER EXISTING SITE LIGHTING FIXTURES ON THIS SITE.
3. FIXTURE AND POLE FINISH COLOR AS SELECTED BY ARCHITECT.
4. CBA = COLOR BY ARCHITECT

CHEHAYEB & ASSOCIATES, INC.
CONSULTING PROFESSIONAL ENGINEERS
3702 AZEELE ST.
TAMPA, FL 33609
(813) 876-1415
www.chehayeb.com
LIC. #49521 SOUHEIL S. CHEHAYEB CERT. #7340
24-30

FWH Architects
3336 Grand Blvd. Suite 201
Holiday, Florida 34690
Ph. 727. 815. 3336
Fax 727. 815. 3337

TO THE BEST OF THE KNOWLEDGE OF THE ARCHITECTS AND ENGINEERS, PLANS AND SPECIFICATIONS COMPLY WITH THE APPLICABLE MINIMUM BUILDING CODES AND THE APPLICABLE MINIMUM FIRE SAFETY STANDARDS

SOUHEIL CHEHAYEB, P.E.
FL License No. 49521

no.	date	revision descriptions

STARBUCKS
SHELL CONSTRUCTION
1990 STATE ROAD 19
TAVARES, FL

03.25.2024
date

24007
comm. no.

ELECTRICAL SITE PLAN

E1.0

3/21/2024 2:05 PM

DETAIL

CONCRETE POLE

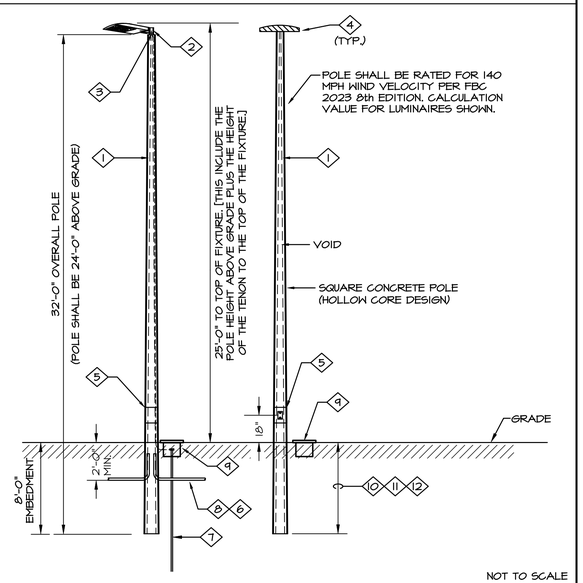

NOT TO SCALE

NOTES:

1. DIRECT BURIAL POLE SHALL BE RATED FOR WIND VELOCITY PER FBC 2023 8th EDITION. CALCULATION SHALL BE BASED ON THE EPA VALUE FOR THE LUMINAIRE SHOWN PER POLE.
2. ELECTRICAL CONTRACTOR TO COORDINATE THE TYPE OF TENON OR MOUNTING REQUIRED WITH THE FIXTURE MANUFACTURER, TO MOUNT THE SITE LIGHT FIXTURE TO THE POLE AS INTENDED AND INDICATED.
3. NO. 6 GROUND CONDUCTOR, FURNISHED WITH THE POLE, BONDED AT THE J BOX AT THE BOTTOM OF THE POLE, SEE NOTE #4, AND TO THE EQUIPMENT GROUND CONDUCTOR RAN WITH THE CIRCUIT FROM THE DESIGNATED PANEL IN THE BUILDING.
4. LUMINAIRE. SEE FIXTURE SCHEDULE ON THE SITE LIGHTING PLAN FOR QUANTITY, TYPE, AND OPTIC ORIENTATION. PROVIDE PROPER BRACKETS TO MOUNT THE FIXTURE AS SHOWN ON THE PHOTOMETRIC PLAN. COORDINATE WITH THE FACTORY AND PROVIDE BRACKET CUT SHEET TO THE ENGINEER FOR APPROVAL PRIOR TO RELEASE.
5. HAND HOLE AT 18" A.F.G.
6. CONDUIT, EXTEND TO PULL BOX OR NEXT POLE AS REQUIRED.
7. 3/4" x 10'-0" COPPER CLAD GROUND ROD FOR LIGHTNING PROTECTION. CONNECTION TO THE GROUND ROD SHALL BE MADE VIA A U.L. LISTED MECHANICAL CONNECTION.
8. SEE ELECTRICAL SITE PLAN FOR CONDUIT AND WIRE SIZES AND DESTINATION PANEL. WIRE SIZE UP THE POLE SHALL BE SAME SIZE FEEDING THE POLE.
9. PROVIDE FLUSH IN GRADE 4"x12" LONG PVC SCHEDULE 80 PIPE. PIPE SHALL HAVE A FEMALE ADAPTER WITH SCREW IN COVER ON ONE END. PIPE SHALL BE USED FOR GROUND ROD CONNECTION INSPECTION WELL. LOCATED BEHIND THE BASE OF THE POLE IN A PROTECTED AREA.
10. DEPTH OF THE EMBEDMENT OF THE POLE SHALL BE AS RECOMMENDED BY POLE MANUFACTURER TO MEET REQUIRED WIND LOADING. MINIMUM EMBEDMENT SHALL NOT BE LESS THAN 8'-0", OR AS LISTED IN NOTE #11 BELOW, WHICHEVER IS MORE STRINGENT.
11. PROVIDE EMBEDMENT LENGTH DESIGN, SIGNED AND SEALED BY A FLORIDA CERTIFIED STRUCTURAL ENGINEER, THAT MEETS THE REQUIRED WIND SPEED AS A MINIMUM, BASED ON POLE HEIGHT, FIXTURES EPA RATING, AND SITE SOIL CONDITIONS WITH ESTIMATED PASSIVE PRESSURE OF 200 PCF.
12. POLE SHALL BE INSTALLED AS FOLLOWS:
    A. USE MINIMUM AUGER SIZE POSSIBLE BASED ON POLE BUTT SIZE TO MINIMIZE DISTURBANCE OF ADJACENT SOIL.
    B. PROVIDE 6" COURSE GRANULAR BASE PAD AT BOTTOM OF POLE.
    C. BACK FILL AND COMPACT, IN 6" LIFTS, TO 90% OF EXISTING SOIL VALUE.
    D. USE CLEAN SOIL FOR COMPACTION.

Surface Schedule

	Reflectance		Normal			
Name	Front	Back	X	Y	Z	Area(ft2)
Solid						
Bottom	0%	0%	0.00	0.00	-1.00	2454.99
Side 1	0%	0%	0.00	1.00	0.00	1657.90
Side 2	0%	0%	1.00	0.00	0.00	480.39
Side 3	0%	0%	0.00	1.00	0.00	194.39
Side 4	0%	0%	1.00	0.00	0.00	393.25
Side 5	0%	0%	0.00	-1.00	0.00	198.86
Side 6	0%	0%	1.00	0.00	0.00	408.89
Side 7	0%	0%	0.00	-1.00	0.00	1660.13
Side 8	0%	0%	-1.00	0.00	0.00	1280.29
Side 9	0%	0%	-0.32	0.95	0.00	7.07
Top	0%	0%	0.00	0.00	1.00	2454.99
Solid						
Bottom	0%	0%	0.00	0.00	-1.00	517.20
Side 1	0%	0%	0.00	1.00	0.00	14.92
Side 2	0%	0%	1.00	0.00	0.00	34.66
Side 3	0%	0%	0.00	-1.00	0.00	14.92
Side 4	0%	0%	-1.00	0.00	0.00	34.66
Top	0%	0%	0.00	0.00	1.00	517.20
Solid						
Bottom	0%	0%	0.00	0.00	-1.00	132.64
Side 1	0%	0%	0.00	1.00	0.00	44.41
Side 2	0%	0%	1.00	0.00	0.00	2.99
Side 3	0%	0%	0.00	-1.00	0.00	44.41
Side 4	0%	0%	-1.00	0.00	0.00	2.99
Top	0%	0%	0.00	0.00	1.00	132.64
Solid						
Bottom	0%	0%	0.00	0.00	-1.00	14.75
Side 1	0%	0%	0.00	1.00	0.00	5.08
Side 2	0%	0%	1.00	0.00	0.00	2.90
Side 3	0%	0%	0.00	-1.00	0.00	5.08
Side 4	0%	0%	-1.00	0.00	0.00	2.90
Top	0%	0%	0.00	0.00	1.00	14.75
Solid						
Bottom	0%	0%	0.00	0.00	-1.00	88.05
Side 1	0%	0%	-1.00	0.00	0.00	0.85
Side 2	0%	0%	0.00	1.00	0.00	6.70
Side 3	0%	0%	-1.00	0.00	0.00	13.06
Side 4	0%	0%	0.00	-1.00	0.00	6.53
Side 5	0%	0%	-1.00	0.00	0.00	1.02
Side 6	0%	0%	0.00	1.00	0.00	11.53
Side 7	0%	0%	1.00	0.00	0.00	15.03
Side 8	0%	0%	0.00	-1.00	0.00	11.78
Side 9	0%	0%	-0.71	0.71	0.00	0.12
Top	0%	0%	0.00	0.00	1.00	88.05
Solid						
Bottom	0%	0%	0.00	0.00	-1.00	0.24
Side 1	0%	0%	0.00	1.00	0.00	4.96
Side 2	0%	0%	1.00	0.00	0.00	4.85
Side 3	0%	0%	0.00	-1.00	0.00	4.96
Side 4	0%	0%	-1.00	0.00	0.00	4.85
Top	0%	0%	0.00	0.00	1.00	0.24
Solid						
Bottom	0%	0%	0.00	0.00	-1.00	0.27
Side 1	0%	0%	0.00	1.00	0.00	4.88
Side 2	0%	0%	1.00	0.00	0.00	5.52
Side 3	0%	0%	0.00	-1.00	0.00	4.88
Side 4	0%	0%	-1.00	0.00	0.00	5.52
Top	0%	0%	0.00	0.00	1.00	0.27
Solid						
Bottom	0%	0%	0.00	0.00	-1.00	0.24
Side 1	0%	0%	0.00	1.00	0.00	4.67
Side 2	0%	0%	1.00	0.00	0.00	5.09
Side 3	0%	0%	0.00	-1.00	0.00	4.67
Side 4	0%	0%	-1.00	0.00	0.00	5.09
Top	0%	0%	0.00	0.00	1.00	0.24
Solid						
Bottom	0%	0%	0.00	0.00	-1.00	0.25
Side 1	0%	0%	0.00	1.00	0.00	5.04
Side 2	0%	0%	1.00	0.00	0.00	4.92
Side 3	0%	0%	0.00	-1.00	0.00	5.04
Side 4	0%	0%	-1.00	0.00	0.00	4.92
Top	0%	0%	0.00	0.00	1.00	0.25
Solid						
	10%	10%	0.71	0.71	0.00	154.48
	10%	10%	-0.70	0.71	0.00	77.28
	10%	10%	-0.71	-0.71	0.00	154.64
	10%	10%	0.71	-0.71	0.00	77.28

Statistics

Description	Symbol	Avg	Max	Min	Max/Min	Avg/Min
1. OVERALL PARCEL	+	2.5 fc	7.7 fc	0.3 fc	25.7:1	8.3:1
2. SPILL LIGHT	+	1.2 fc	3.0 fc	0.3 fc	10.0:1	4.0:1
3. PATIO AREA LIGHTING	+	11.3 fc	14.3 fc	4.7 fc	3.0:1	2.4:1
4. FRONT CANOPY LIGHTING	+	9.6 fc	11.4 fc	7.6 fc	1.5:1	1.3:1
5. DRIVE THRU AREA LIGHTING	+	9.5 fc	11.0 fc	7.4 fc	1.5:1	1.3:1
6. SERVICE DOOR AREA LIGHTING	+	4.0 fc	4.0 fc	4.0 fc	1.0:1	1.0:1
7. DUMPSTER ENCLOSURE LIGHTING	+	7.1 fc	10.3 fc	3.3 fc	3.1:1	2.2:1
8. PAVED AND PARKING AREAS	X	2.9 fc	7.7 fc	0.6 fc	12.8:1	4.8:1

Luminaire Locations

		Location						Aim		
No.	Label	X	Y	Z	MH	Orientation	Tilt	X	Y	Z
1	CA	140.92	228.11	10.00	10.00	97.40	0.00	140.92	228.11	0.00
2	CA	148.92	228.11	10.00	10.00	0.00	0.00	148.92	228.11	0.00
3	CA	140.92	234.11	10.00	10.00	0.00	0.00	140.92	234.11	0.00
4	CA	148.92	234.11	10.00	10.00	0.00	0.00	148.92	234.11	0.00
5	CA	140.92	237.44	10.00	10.00	0.00	0.00	140.92	237.44	0.00
6	CA	148.92	237.44	10.00	10.00	0.00	0.00	148.92	237.44	0.00
7	CA	140.92	243.44	10.00	10.00	0.00	0.00	140.92	243.44	0.00
8	CA	140.92	246.78	10.00	10.00	0.00	0.00	140.92	246.78	0.00
9	CA	148.92	243.44	10.00	10.00	0.00	0.00	148.92	243.44	0.00
10	CA	148.92	246.78	10.00	10.00	0.00	0.00	148.92	246.78	0.00
11	CA	140.92	256.27	10.00	10.00	0.00	0.00	140.92	256.27	0.00
12	CA	148.92	256.27	10.00	10.00	0.00	0.00	148.92	256.27	0.00
13	CA	140.92	252.78	10.00	10.00	0.00	0.00	140.92	252.78	0.00
14	CA	148.92	252.78	10.00	10.00	0.00	0.00	148.92	252.78	0.00
15	CA	154.59	256.27	10.00	10.00	0.00	0.00	154.59	256.27	0.00
16	CA	160.25	256.27	10.00	10.00	0.00	0.00	160.25	256.27	0.00
17	CA	163.92	256.27	10.00	10.00	0.00	0.00	163.92	256.27	0.00
18	CA	169.59	256.27	10.00	10.00	0.00	0.00	169.59	256.27	0.00
19	CA	175.42	256.22	10.00	10.00	0.00	0.00	175.42	256.22	0.00
20	CA	181.25	256.22	10.00	10.00	0.00	0.00	181.25	256.22	0.00
22	CA	190.25	256.22	10.00	10.00	0.00	0.00	190.25	256.22	0.00
23	CA	194.75	256.33	10.00	10.00	0.00	0.00	194.75	256.33	0.00
24	CA	216.92	235.61	10.00	10.00	0.00	0.00	216.92	235.61	0.00
25	CA	216.92	232.94	10.00	10.00	0.00	0.00	216.92	232.94	0.00
26	CA	216.97	230.61	10.00	10.00	0.00	0.00	216.97	230.61	0.00
27	CA	216.87	227.94	10.00	10.00	0.00	0.00	216.87	227.94	0.00
28	CA	185.84	210.61	10.00	10.00	0.00	0.00	185.84	210.61	0.00
29	CA	185.76	256.26	10.00	10.00	0.00	0.00	185.76	256.26	0.00
1	SA	178.89	177.84	25.00	25.00	180.00	0.00	178.89	175.09	0.00
3	SA	210.79	284.53	25.00	25.00	0.00	0.00	210.79	287.28	0.00
4	SA	140.51	284.53	25.00	25.00	0.00	0.00	140.51	287.28	0.00
5	SA	271.80	176.24	25.00	25.00	270.88	0.00	269.05	176.29	0.00
6	SB	75.81	254.66	25.00	25.00	90.00	0.00	78.56	254.66	0.00
7	SB	75.81	180.77	25.00	25.00	90.00	0.00	78.56	180.77	0.00
9	SB	272.97	257.69	25.00	25.00	270.00	0.00	270.22	257.69	0.00
2	SC	302.80	161.38	25.00	25.00	169.93	0.00	303.28	158.67	0.00
1	SD	191.05	343.15	25.00	25.00	270.00	0.00	188.30	343.15	0.00
1	WD	271.13	194.07	7.50	7.50	225.74	0.00	270.78	193.72	0.00

Schedule

Symbol	Label	Quantity	Manufacturer	Catalog Number	Description	Number Lamps	Lumens Per Lamp	Light Loss Factor	Wattage
	SA	4	Lithonia Lighting	DSX1 LED P6 40K 70CRI T5M MVOLT	D-Series Size 1 Area Luminaire P6 Performance Package 4000K CCT 70 CRI Type 5 Medium	1	21447	0.95	165.25
	SB	3	Lithonia Lighting	DSX1 LED P6 40K 70CRI T4M MVOLT HS	D-Series Size 1 Area Luminaire P6 Performance Package 4000K CCT 70 CRI Type 4 Medium Houseside Shield	1	17932	0.95	165.2497
	SC	1	Lithonia Lighting	DSX1 LED P2 40K 70CRI LCCO MVOLT	D-Series Size 1 Area Luminaire P2 Performance Package 4000K CCT 70 CRI Left Corner Cutoff Extreme Backlight Control	1	7165	0.95	67.79
	SD	1	Lithonia Lighting	DSX1 LED P2 40K 70CRI RCCO MVOLT	D-Series Size 1 Area Luminaire P2 Performance Package 4000K CCT 70 CRI Right Corner Cutoff Extreme Backlight Control	1	7165	0.95	67.79
	WD	1	Lithonia Lighting	DSXW1 LED 10C 1000 40K T3M MVOLT - PIRIFC3V	DSXW1 LED WITH (1) 10 LED LIGHT ENGINES, TYPE T3M OPTIC, 4000K, @ 1000mA.	1	3873	0.95	38.8
	CA	28	Lithonia Ligting	WF4 LED 30K40K50K MVOLT 90CRI 3000K	4" LED Wafer Selectable White MVOLT 30K40K50K _ 3000K	1	762	0.95	10.55

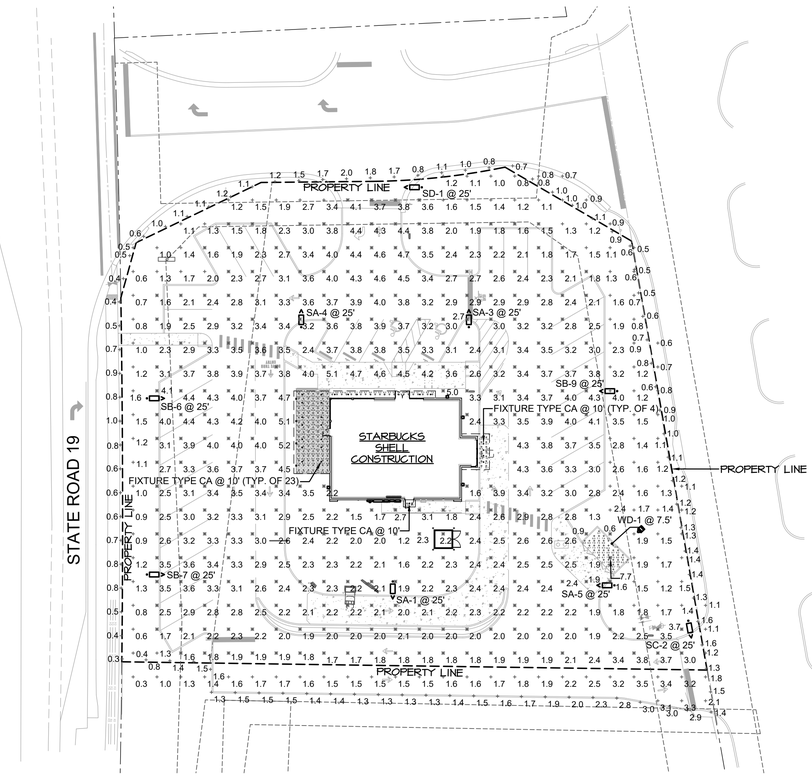

NORTH

PHOTOMETRIC SITE PLAN

SCALE: 1" = 30'-0"

ALL SITE AND BUILDING LIGHTS PROPOSED ON THIS PROJECT ARE DESIGNED AS FULL CUTOFF CLASSIFICATION WITH ZERO UP LIGHT COMPONENTS.

THESE PHOTOMETRICS ARE INTENDED FOR DESIGN AND EVALUATION PURPOSES ONLY. THE POINT-BY-POINT SHOWN IS BASED ON A COMPUTER LIGHTING PROGRAM WITH APPROXIMATED PARAMETERS. THEREFORE, THESE PHOTOMETRICS MAY VARY FROM ACTUAL FIELD CONDITIONS.

FIXTURE NOTE:

FIXTURE SHOWN ON THIS SHEET IS FOR REFERENCE ONLY. SEE ACTUAL FIXTURE SCHEDULE ELSE WHERE IN THIS DOCUMENTS FOR ACTUAL CATALOG NUMBER AND DESCRIPTION.

N&O

CHEHAYEB & ASSOCIATES, INC.
CONSULTING PROFESSIONAL ENGINEERS
3702 AZEELE ST.
TAMPA, FL 33609
(813) 876-1415
www.chehayeb.com
LIC. #49521 SOUHEIL S. CHEHAYEB CERT. #7340
24-30

FWH Architects
3336 Grand Blvd. Suite 201
Holiday, Florida 34690
Ph. 727. 815. 3336
Fax 727. 815. 3337

TO THE BEST OF THE KNOWLEDGE OF THE ARCHITECTS AND ENGINEERS, PLANS AND SPECIFICATIONS COMPLY WITH THE APPLICABLE MINIMUM BUILDING CODES AND THE APPLICABLE MINIMUM FIRE SAFETY STANDARDS

SOUHEIL CHEHAYEB, P.E.
FL License No. 49521

no.	date	revision descriptions

STARBUCKS
SHELL CONSTRUCTION
1990 STATE ROAD 19
TAVARES, FL

03.25.2024
date

24007
comm. no.

PHOTOMETRIC SITE PLAN

E1.1

3/21/2024 2:05 PM

LF -1	Exterior Sconce	NOVUS DECOR	AR2000, 94.5 inch Option, Color temp warm white 3000K	Armour outdoor wall sconce

BEST SELLERS LIGHTING WALL DECOR RUGS ACCESSORIES

USD$ NOVUS USD$ ACCOUNT SEARCH CART (0)

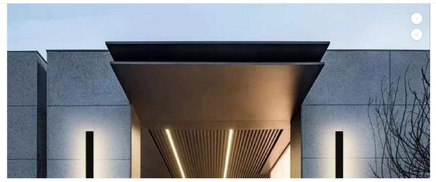

NOVUS DECOR

ARMOUR OUTDOOR WALL SCONCE

★★★★★ 4.9 (34 reviews)

$159 ~~$199~~

Emitting Color: Warm White

Size: 94.5"

− 1 +

ADD TO CART

Upgrade the beauty of your outdoor lighting with the Armor Outdoor Wall Sconce. European in design and made from extruded aluminum with a dark anthracite finish, this wall light sconce is a stylish way to light up your home exterior. The refined, unadorned minimalism allows it to become an ideal complement to contemporary architecture.

Specifications:

- Light Bulb Included
- Dimmable
- Voltage: 85-265V
- Material: Premium Aluminum, Acrylic
- Color: Black Matte
- Power Source: AC
- LED Lifespan: Lasting Over 50,000+ Hours
- Water Resistant: IP65
- Warranty: 5 Year

FedEx Delivery by Fedex in 10-15 days.

Installation Guide:

TYPE 'D' FIXTURE

https://www.novus-decor.com/products/armor-black-outdoor-wall-sconce?variant=40159712247962 1/4

D-Series Size 1
LED Area Luminaire

Catalog Number: DSX1 LED P6 40K 70CRI T5M MVOLT
Notes:
Type: SA

d*series

Specifications

EPA: 0.69 ft² (0.06 m²)
Length: 32.71" (83.1 cm)
Width: 14.26" (36.2 cm)
Height H1: 7.88" (20.0 cm)
Height H2: 2.73" (6.9 cm)
Weight: 34 lbs (15.4 kg)

Introduction

The modern styling of the D-Series features a highly refined aesthetic that blends seamlessly with its environment. The D-Series offers the benefits of the latest in LED technology into a high performance, high efficacy, long-life luminaire.

The photometric performance results in sites with excellent uniformity, greater pole spacing and lower power density. D-Series outstanding photometry aids in reducing the number of poles required in area lighting applications with typical energy savings of 65% and expected service life of over 100,000 hours.

Ordering Information

EXAMPLE: DSX1 LED P7 40K 70CRI T3M MVOLT SPA NLTAIR2 PIRHN DDBXD

DSX1 LED

Series	LEDs	Color temperature[1]	Color Rendering Index[1]	Distribution	Voltage	Mounting
DSX1 LED	**Forward optics** P1 P6 P2 P7 P3 P8 P4 P9 P5 **Rotated optics** P10[2] P12[2] P11[2] P13[2]	(this section 70CRI only) 30K 3000K 40K 4000K 50K 5000K (this section 80CRI only, extended lead times apply) 27K 2700K 30K 3000K 35K 3500K 40K 4000K 50K 5000K	70CRI 70CRI 70CRI	AFR Automotive front row T1S Type I short T2M Type II medium T3M Type III medium T3LG Type III low glare[3] T4M Type IV medium T4LG Type IV low glare[3] TFTM Forward throw medium T5M Type V medium T5LG Type V low glare T5W Type V wide BLC3 Type III backlight control[3] BLC4 Type IV backlight control[3] LCCO Left corner cutoff[3] RCCO Right corner cutoff[3]	MVOLT (120V-277V)[4] HVOLT (347V-480V)[5] XVOLT (277V - 480V)[5]	**Shipped included** SPA Square pole mounting (#8 drilling) RPA Round pole mounting (#8 drilling) SPAS Square pole mounting (#5 drilling)[3] RPAS Round pole mounting (#5 drilling)[3] SPAWN Square narrow pole mounting (#8 drilling) WBA Wall bracket[3]

Control options			Other options		Finish (required)	
Shipped installed NLTAIR2 PIRHN nLight AIR gen 2 enabled with bi-level motion / ambient sensor, 8-40' mounting height, ambient sensor enabled at 2fc.[7,8,9,21] PIR High/low, motion/ambient sensor, 8-40' mounting height, ambient sensor enabled at 2fc.[7,8,9,21] PER NEMA twist-lock receptacle only (controls ordered separately)[7] PERS Five-pin receptacle only (controls ordered separately)[7,21]	PER7 Seven-pin receptacle only (controls ordered separately)[7,21] FAO Field adjustable output[7,21] BL30 Bi-level switched dimming, 30%[8,21] BL50 Bi-level switched dimming, 50%[8,21] DMG 0-10v dimming wires pulled outside fixture (for use with an external control, ordered separately)[7] DS Dual switching[7,8,21,22]	**Shipped installed** SPD50KV 20KV surge protection HS Houseside shield (black finish standard)[23] LVO Left oriented optics[7] RHO Right oriented optics[7] CCE Coastal Construction[24] **Shipped separately** EGS External Glare Shield (reversible, field install required, matches housing finish) BS Bird Spikes (field install required)	DDBXD Dark Bronze DBLXD Black DNAXD Natural Aluminum DNWXD White DDBTXD Textured dark bronze DBLBXD Textured black DNATXD Textured natural aluminum DNWHGXD Textured white	DDBXD Dark Bronze DBLXD Black DNAXD Natural Aluminum DNWXD White DDBTXD Textured dark bronze DBLBXD Textured black DNATXD Textured natural aluminum DNWHGXD Textured white		

LITHONIA LIGHTING COMMERCIAL OUTDOOR

One Lithonia Way • Conyers, Georgia 30012 • Phone: 1-800-705-SERV (7378) • www.lithonia.com
© 2011-2022 Acuity Brands Lighting, Inc. All rights reserved.

DSX1 LED
Rev. 11/10/22
Page 1 of 10

D-Series Size 1
LED Area Luminaire

Catalog Number: DSX1 LED P6 40K 70CRI T4M MVOLT HS
Notes:
Type: SB

d*series

Specifications

EPA: 0.69 ft² (0.06 m²)
Length: 32.71" (83.1 cm)
Width: 14.26" (36.2 cm)
Height H1: 7.88" (20.0 cm)
Height H2: 2.73" (6.9 cm)
Weight: 34 lbs (15.4 kg)

Introduction

The modern styling of the D-Series features a highly refined aesthetic that blends seamlessly with its environment. The D-Series offers the benefits of the latest in LED technology into a high performance, high efficacy, long-life luminaire.

The photometric performance results in sites with excellent uniformity, greater pole spacing and lower power density. D-Series outstanding photometry aids in reducing the number of poles required in area lighting applications with typical energy savings of 65% and expected service life of over 100,000 hours.

Ordering Information

EXAMPLE: DSX1 LED P7 40K 70CRI T3M MVOLT SPA NLTAIR2 PIRHN DDBXD

DSX1 LED

Series	LEDs	Color temperature[1]	Color Rendering Index[1]	Distribution	Voltage	Mounting
DSX1 LED	**Forward optics** P1 P6 P2 P7 P3 P8 P4 P9 P5 **Rotated optics** P10[2] P12[2] P11[2] P13[2]	(this section 70CRI only) 30K 3000K 40K 4000K 50K 5000K (this section 80CRI only, extended lead times apply) 27K 2700K 30K 3000K 35K 3500K 40K 4000K 50K 5000K	70CRI 70CRI 70CRI	AFR Automotive front row T1S Type I short T2M Type II medium T3M Type III medium T3LG Type III low glare[3] T4M Type IV medium T4LG Type IV low glare[3] TFTM Forward throw medium T5M Type V medium T5LG Type V low glare T5W Type V wide BLC3 Type III backlight control[3] BLC4 Type IV backlight control[3] LCCO Left corner cutoff[3] RCCO Right corner cutoff[3]	MVOLT (120V-277V)[4] HVOLT (347V-480V)[5] XVOLT (277V - 480V)[5]	**Shipped included** SPA Square pole mounting (#8 drilling) RPA Round pole mounting (#8 drilling) SPAS Square pole mounting (#5 drilling)[3] RPAS Round pole mounting (#5 drilling)[3] SPAWN Square narrow pole mounting (#8 drilling) WBA Wall bracket[3]

Control options			Other options		Finish (required)	
Shipped installed NLTAIR2 PIRHN nLight AIR gen 2 enabled with bi-level motion / ambient sensor, 8-40' mounting height, ambient sensor enabled at 2fc.[7,8,9,21] PIR High/low, motion/ambient sensor, 8-40' mounting height, ambient sensor enabled at 2fc.[7,8,9,21] PER NEMA twist-lock receptacle only (controls ordered separately)[7] PERS Five-pin receptacle only (controls ordered separately)[7,21]	PER7 Seven-pin receptacle only (controls ordered separately)[7,21] FAO Field adjustable output[7,21] BL30 Bi-level switched dimming, 30%[8,21] BL50 Bi-level switched dimming, 50%[8,21] DMG 0-10v dimming wires pulled outside fixture (for use with an external control, ordered separately)[7] DS Dual switching[7,8,21,22]	**Shipped installed** SPD50KV 20KV surge protection HS Houseside shield (black finish standard)[23] LVO Left oriented optics[7] RHO Right oriented optics[7] CCE Coastal Construction[24] **Shipped separately** EGS External Glare Shield (reversible, field install required, matches housing finish) BS Bird Spikes (field install required)	DDBXD Dark Bronze DBLXD Black DNAXD Natural Aluminum DNWXD White DDBTXD Textured dark bronze DBLBXD Textured black DNATXD Textured natural aluminum DNWHGXD Textured white	DDBXD Dark Bronze DBLXD Black DNAXD Natural Aluminum DNWXD White DDBTXD Textured dark bronze DBLBXD Textured black DNATXD Textured natural aluminum DNWHGXD Textured white		

LITHONIA LIGHTING COMMERCIAL OUTDOOR

One Lithonia Way • Conyers, Georgia 30012 • Phone: 1-800-705-SERV (7378) • www.lithonia.com
© 2011-2022 Acuity Brands Lighting, Inc. All rights reserved.

DSX1 LED
Rev. 11/10/22
Page 1 of 10

D-Series Size 1
LED Area Luminaire

Catalog Number: DSX1 LED P2 40K 70CRI LCCO MVOLT
Notes:
Type: SC

d*series

Specifications

EPA: 0.69 ft² (0.06 m²)
Length: 32.71" (83.1 cm)
Width: 14.26" (36.2 cm)
Height H1: 7.88" (20.0 cm)
Height H2: 2.73" (6.9 cm)
Weight: 34 lbs (15.4 kg)

Introduction

The modern styling of the D-Series features a highly refined aesthetic that blends seamlessly with its environment. The D-Series offers the benefits of the latest in LED technology into a high performance, high efficacy, long-life luminaire.

The photometric performance results in sites with excellent uniformity, greater pole spacing and lower power density. D-Series outstanding photometry aids in reducing the number of poles required in area lighting applications with typical energy savings of 65% and expected service life of over 100,000 hours.

Ordering Information

EXAMPLE: DSX1 LED P7 40K 70CRI T3M MVOLT SPA NLTAIR2 PIRHN DDBXD

DSX1 LED

Series	LEDs	Color temperature[1]	Color Rendering Index[1]	Distribution	Voltage	Mounting
DSX1 LED	**Forward optics** P1 P6 P2 P7 P3 P8 P4 P9 P5 **Rotated optics** P10[2] P12[2] P11[2] P13[2]	(this section 70CRI only) 30K 3000K 40K 4000K 50K 5000K (this section 80CRI only, extended lead times apply) 27K 2700K 30K 3000K 35K 3500K 40K 4000K 50K 5000K	70CRI 70CRI 70CRI	AFR Automotive front row T1S Type I short T2M Type II medium T3M Type III medium T3LG Type III low glare[3] T4M Type IV medium T4LG Type IV low glare[3] TFTM Forward throw medium T5M Type V medium T5LG Type V low glare T5W Type V wide BLC3 Type III backlight control[3] BLC4 Type IV backlight control[3] LCCO Left corner cutoff[3] RCCO Right corner cutoff[3]	MVOLT (120V-277V)[4] HVOLT (347V-480V)[5] XVOLT (277V - 480V)[5]	**Shipped included** SPA Square pole mounting (#8 drilling) RPA Round pole mounting (#8 drilling) SPAS Square pole mounting (#5 drilling)[3] RPAS Round pole mounting (#5 drilling)[3] SPAWN Square narrow pole mounting (#8 drilling) WBA Wall bracket[3]

Control options			Other options		Finish (required)	
Shipped installed NLTAIR2 PIRHN nLight AIR gen 2 enabled with bi-level motion / ambient sensor, 8-40' mounting height, ambient sensor enabled at 2fc.[7,8,9,21] PIR High/low, motion/ambient sensor, 8-40' mounting height, ambient sensor enabled at 2fc.[7,8,9,21] PER NEMA twist-lock receptacle only (controls ordered separately)[7] PERS Five-pin receptacle only (controls ordered separately)[7,21]	PER7 Seven-pin receptacle only (controls ordered separately)[7,21] FAO Field adjustable output[7,21] BL30 Bi-level switched dimming, 30%[8,21] BL50 Bi-level switched dimming, 50%[8,21] DMG 0-10v dimming wires pulled outside fixture (for use with an external control, ordered separately)[7] DS Dual switching[7,8,21,22]	**Shipped installed** SPD50KV 20KV surge protection HS Houseside shield (black finish standard)[23] LVO Left oriented optics[7] RHO Right oriented optics[7] CCE Coastal Construction[24] **Shipped separately** EGS External Glare Shield (reversible, field install required, matches housing finish) BS Bird Spikes (field install required)	DDBXD Dark Bronze DBLXD Black DNAXD Natural Aluminum DNWXD White DDBTXD Textured dark bronze DBLBXD Textured black DNATXD Textured natural aluminum DNWHGXD Textured white	DDBXD Dark Bronze DBLXD Black DNAXD Natural Aluminum DNWXD White DDBTXD Textured dark bronze DBLBXD Textured black DNATXD Textured natural aluminum DNWHGXD Textured white		

LITHONIA LIGHTING COMMERCIAL OUTDOOR

One Lithonia Way • Conyers, Georgia 30012 • Phone: 1-800-705-SERV (7378) • www.lithonia.com
© 2011-2022 Acuity Brands Lighting, Inc. All rights reserved.

DSX1 LED
Rev. 11/10/22
Page 1 of 10

D-Series Size 1
LED Area Luminaire

Catalog Number: DSX1 LED P2 40K 70CRI RCCO MVOLT
Notes:
Type: SD

d*series

Specifications

EPA: 0.69 ft² (0.06 m²)
Length: 32.71" (83.1 cm)
Width: 14.26" (36.2 cm)
Height H1: 7.88" (20.0 cm)
Height H2: 2.73" (6.9 cm)
Weight: 34 lbs (15.4 kg)

Introduction

The modern styling of the D-Series features a highly refined aesthetic that blends seamlessly with its environment. The D-Series offers the benefits of the latest in LED technology into a high performance, high efficacy, long-life luminaire.

The photometric performance results in sites with excellent uniformity, greater pole spacing and lower power density. D-Series outstanding photometry aids in reducing the number of poles required in area lighting applications with typical energy savings of 65% and expected service life of over 100,000 hours.

Ordering Information

EXAMPLE: DSX1 LED P7 40K 70CRI T3M MVOLT SPA NLTAIR2 PIRHN DDBXD

DSX1 LED

Series	LEDs	Color temperature[1]	Color Rendering Index[1]	Distribution	Voltage	Mounting
DSX1 LED	**Forward optics** P1 P6 P2 P7 P3 P8 P4 P9 P5 **Rotated optics** P10[2] P12[2] P11[2] P13[2]	(this section 70CRI only) 30K 3000K 40K 4000K 50K 5000K (this section 80CRI only, extended lead times apply) 27K 2700K 30K 3000K 35K 3500K 40K 4000K 50K 5000K	70CRI 70CRI 70CRI	AFR Automotive front row T1S Type I short T2M Type II medium T3M Type III medium T3LG Type III low glare[3] T4M Type IV medium T4LG Type IV low glare[3] TFTM Forward throw medium T5M Type V medium T5LG Type V low glare T5W Type V wide BLC3 Type III backlight control[3] BLC4 Type IV backlight control[3] LCCO Left corner cutoff[3] RCCO Right corner cutoff[3]	MVOLT (120V-277V)[4] HVOLT (347V-480V)[5] XVOLT (277V - 480V)[5]	**Shipped included** SPA Square pole mounting (#8 drilling) RPA Round pole mounting (#8 drilling) SPAS Square pole mounting (#5 drilling)[3] RPAS Round pole mounting (#5 drilling)[3] SPAWN Square narrow pole mounting (#8 drilling) WBA Wall bracket[3]

Control options			Other options		Finish (required)	
Shipped installed NLTAIR2 PIRHN nLight AIR gen 2 enabled with bi-level motion / ambient sensor, 8-40' mounting height, ambient sensor enabled at 2fc.[7,8,9,21] PIR High/low, motion/ambient sensor, 8-40' mounting height, ambient sensor enabled at 2fc.[7,8,9,21] PER NEMA twist-lock receptacle only (controls ordered separately)[7] PERS Five-pin receptacle only (controls ordered separately)[7,21]	PER7 Seven-pin receptacle only (controls ordered separately)[7,21] FAO Field adjustable output[7,21] BL30 Bi-level switched dimming, 30%[8,21] BL50 Bi-level switched dimming, 50%[8,21] DMG 0-10v dimming wires pulled outside fixture (for use with an external control, ordered separately)[7] DS Dual switching[7,8,21,22]	**Shipped installed** SPD50KV 20KV surge protection HS Houseside shield (black finish standard)[23] LVO Left oriented optics[7] RHO Right oriented optics[7] CCE Coastal Construction[24] **Shipped separately** EGS External Glare Shield (reversible, field install required, matches housing finish) BS Bird Spikes (field install required)	DDBXD Dark Bronze DBLXD Black DNAXD Natural Aluminum DNWXD White DDBTXD Textured dark bronze DBLBXD Textured black DNATXD Textured natural aluminum DNWHGXD Textured white	DDBXD Dark Bronze DBLXD Black DNAXD Natural Aluminum DNWXD White DDBTXD Textured dark bronze DBLBXD Textured black DNATXD Textured natural aluminum DNWHGXD Textured white		

LITHONIA LIGHTING COMMERCIAL OUTDOOR

One Lithonia Way • Conyers, Georgia 30012 • Phone: 1-800-705-SERV (7378) • www.lithonia.com
© 2011-2022 Acuity Brands Lighting, Inc. All rights reserved.

DSX1 LED
Rev. 11/10/22
Page 1 of 10

D-Series Size 1
LED Wall Luminaire

Catalog Number: DSXW1 - LED - 10C - 1000 - 40K - T3M - MVOLT - (CBA)-PIR1FC3V
Notes:
Type: 'WD'

d*series

Specifications

Luminaire

Width: 13-3/4" (34.9 cm)
Depth: 10" (25.4 cm)
Height: 6-3/8" (16.2 cm)
Weight: 12 lbs (5.4 kg)

Back Box (BBW, E20WC)

Width: 13-3/4" (34.9 cm) BBW Weight: 5 lbs (2.3 kg)
Depth: 4" (10.2 cm) E20WC Weight: 10 lbs (4.5 kg)
Height: 6-3/8" (16.2 cm)

For 3/4" NPT side-entry conduit (BBW only)

Introduction

The D-Series Wall luminaire is a stylish, fully integrated LED solution for building-mount applications. It features a sleek, modern design and is carefully engineered to provide long-lasting, energy-efficient lighting with a variety of optical and control options for customized performance.

With an expected service life of over 20 years of nighttime use and up to 74% in energy savings over comparable 250W metal halide luminaires, the D-Series Wall is a reliable, low-maintenance lighting solution that produces sites that are exceptionally illuminated.

Ordering Information

EXAMPLE: DSXW1 LED 20C 1000 40K T3M MVOLT DDBTXD

DSXW1 LED

Series	LEDs	Drive Current	Color temperature	Distribution	Voltage	Mounting	Control Options
DSXW1 LED	10C 10 LEDs (one engine) 20C 20 LEDs (two engines)	350 350 mA 530 530 mA 700 700 mA 1000 1000 mA (1 A)[1]	30K 3000 K 40K 4000 K 50K 5000 K AMBPC Amber phosphor converted	T2S Type II Short T2M Type II Medium T3S Type III Short T3M Type III Medium[2] T4M Type IV Medium TFTM Forward Throw Medium	MVOLT[3] 120[3] 208[3] 240[3] 277[3] 347[3,4] 480[3,4]	**Shipped included** (blank) Surface-mounted back box (for conduit entry)[5] BBW Surface-mounted back box (for conduit entry)[5]	**Shipped included** PE Photoelectric cell, button type[6] DMG 0-10v dimming wires pulled outside fixture (for use with an external control, ordered separately) PIR 180° motion/ambient light sensor, <15' mtg ht[7,8] PIRH 360° motion/ambient light sensor, 15-30' mtg ht[7,8] PIR1FC3V Motion/ambient sensor, 8-15' mounting height, ambient sensor enabled at 3fc[7,8] PIRH1FC3V Motion/ambient sensor, 15-30' mounting height, ambient sensor enabled at 3fc[7,8] E20WC Emergency battery backup (includes external component enclosure), CA title 20 compliant[9]

Other Options		Finish (required)	
Shipped installed SF Single fuse (120, 277 or 347V)[10] DF Double fuse (208, 240 or 480V)[10] HS House-side shield[11] SPD Separate surge protection[12] **Shipped separately**[13] BSW Bird-deterrent spikes VG Vandal guard DDL Diffused drop lens	DDBXD Dark bronze DBLXD Black DNAXD Natural aluminum DNWXD White DSSTXD Sandstone DDBTXD Textured dark bronze DBLBXD Textured black DNATXD Textured natural aluminum DNWHGXD Textured white DSSTXD Textured sandstone		

Accessories
Ordered and shipped separately.
DSXRMC2 House-side shield (one per light engine)
DSXWBWG1 Bird-deterrent spikes
DSXRVG1 Vandal guard accessory

NOTES
1 20C 1000 is not available with PIR, PIRH, PIR1FC3V or PIRHFC3V.
2 MVOLT driver operates on any line voltage from 120-277V (50/60 Hz).
3 Single fuse (SF) requires 120, 277 or 347 voltage option. Double fuse (DF) requires 208, 240 or 480 voltage option.
4 Not available with 20C, 700mA or 1000mA. Not available with PIR or PIRH.
5 Back box ships installed on fixture. Cannot be field installed. Cannot be ordered as an accessory.
6 Photocontrol (PE) requires 120, 208, 240, 277 or 347 voltage option. Not available with emergency battery backup (E20WC) or PIRH or PIRH1.
7 Reference Motion Sensor table on page 3.
8 Same as old ELCW. Cold weather (-20C) rated. Not compatible with conduit entry applications. Not available with BBW mounting option. Not available with fusing. Not available with 347 or 480 voltage options. Emergency components located in back box housing. Emergency mode of PIR1FC3V motion project page at www.lithonia.com.
9 Not available with SPD.
10 Not available on E20WC.
11 Also available as a separate accessory; see Accessories information.
12 Not available with E20WC.

LITHONIA LIGHTING COMMERCIAL OUTDOOR

One Lithonia Way • Conyers, Georgia 30012 • Phone: 1-800-705-SERV (7378) • www.lithonia.com
© 2013-2023 Acuity Brands Lighting, Inc. All rights reserved.

DSXW1 LED
Rev. 1/18/23

LITHONIA LIGHTING

Catalog Number	WF4 LED 30K40K50K MVOLT 90CRI 3000K
Notes	
Type	CA

Wafer LED Recessed Downlight

WF4
4" LED Switchable White Color Temperature

IC/Non-IC
New Construction/Remodel

FEATURES & SPECIFICATIONS

INTENDED USE — The 4" Wafer™ LED Downlight with Switchable White provides high-quality light output and efficiency featuring a switch for easy color temperature adjustment - while eliminating the need for recessed housings. The innovative, slim design allows for easy retrofit, remodel or new construction installation from below the ceiling. The Wafer LED downlight is wet location listed – making it ideal for use in a breadth of outdoor residential, hospitality, commercial and multifamily applications. The LED module maintains at least 70% light output for 50,000 hours.

CONSTRUCTION — Aluminum die cast outer frame. Durable, powder coat paint to prevent rust. FT4 plenum rated cable connector to connect from module to remote driver box. IC rated driver with convenience and value of two remote selectable color temperature options, each with a setting choice to choose either 2700K, 3000K, and 3500K or 3000K, 4000K, and 5000K using the switch. The isolated driver integrated inside steel remote box with four 7/8" knockouts with slots for pryout. Suitable for pulling wires with the 12 cubic inch wiring compartment to accommodate up to (6) 14 gauge insulated conductors; making the Wafer LED Downlights much easier to wire in 2nd/3rd floor (plus ground) daisy-chain applications and contractor friendly.

INSTALLATION — Ideal for shallow ceiling plenum; no housing required. Steel spring clip for easy installation. 4" cut out template is provided to ensure a correct sized hole in cut into ceiling for proper installation of the trim. Size of hole should not exceed 4 1/4 inches for this product. Suitable for installation in t-grid and drop ceiling applications. 3" plenum space required for installation of the remote driver box.

OPTICS — Edge-lit LED technology uses light guided plate to distribute light. Polycarbonate lens provides even illumination throughout the space.

ELECTRICAL — Connect directly to 120VClass 2 CAN ICES-005 (B) / NMB-005 (B) LED driver. High efficient driver with power factor > 0.9. Ambient operating temperature: -40°F (-40°C) to +104°F (+40°C). Dimming down to 10% with most standard incandescent dimers (see list of approved dimmers). Replaces 65W incandescent for 750 lumens.

LISTINGS — — CSA certified to US and Canadian safety standards. ENERGY STAR® certified. Wet location. Air Tight certified in accordance with ASTM E283-2004. NOM Certified. Can be used to comply with California Title 24 Part 6 High Efficacy LED light Source Requirements.

WARRANTY — 5-year limited warranty. Complete warranty terms located at: www.acuitybrands.com/support/warranty/terms-and-conditions

Note: Actual performance may differ as a result of end-user environment and application.
All values are design or typical values, measured under laboratory conditions at 25 °C.
Specifications subject to change without notice.

Specifications

Aperture: 3.2 (8.1)
Ceiling opening: 4.2 (10.7)
Overlap trim: 4.7 (12.0)
Height: 1.1 (2.8)

All dimensions are inches (centimeters) unless otherwise indicated.

ORDERING INFORMATION For shortest lead times, configure product using **standard options (shown in bold).** **Example:** WF4 LED 30K40K50K 90CRI MW

WF4	LED				
Series	**Lamp**		**CCT/W/Lumens**[1]	**CRI**	**Finish**
WF4 4" wafer-thin LED downlight	**LED** LED		**27K30K35K** 2700K/3000K/3500K 30K40K50K 3000K/4000K/5000K **30K40K50K** 3000K/3500K/4000K/4500K/5000K	**90CRI** 90CR	**MW** Matte White **MB** Matte Black **BN** Brush Nickel **ORB** Oil-Rubbed Bronze

Accessories: *Order as separate catalog number.*	
WF8643 Pan U	Universal new construction pan
WF8 U	Remodel joist bar
WFEK5 5W3PIN FT4	3-Pin 6ft Cable
WFEK10 5W3PIN FT4	3-Pin 10ft Cable
WFEK20 5W3PIN FT4	3-Pin 20ft Cable
WF4GR MW JZ	4" round oversized trim ring

Notes
1 Total system delivered lumens.

DOWNLIGHTING WF4 LED - Switchable White

WIRING DETAIL

DUCT DETECTOR

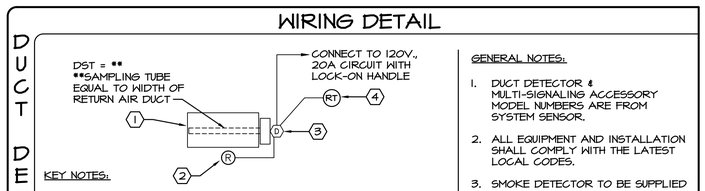

KEY NOTES:

1. RETURN AIR DUCT AND/OR SUPPLY AIR DUCT. SEE FLOOR PLAN SHEET FOR LOCATION AND QUANTITY. COORDINATE WITH MECHANICAL CONTRACTOR
2. CONTROL RELAY FOR SHUT DOWN OF RTU'S.
3. SYSTEM SENSOR D4120 PHOTOELECTRIC 120V AC SMOKE DETECTOR. DUCT SMOKE DETECTOR SHALL BE FURNISHED BY ELECTRICAL CONTRACTOR, INSTALLED BY MECHANICAL CONTRACTOR IN DUCTWORK AND WIRED BY ELECTRICAL CONTRACTOR.
4. SYSTEM SENSOR RTS2-AOS REMOTE TEST STATION WITH STROBE

GENERAL NOTES:

1. DUCT DETECTOR & MULTI-SIGNALING ACCESSORY MODEL NUMBERS ARE FROM SYSTEM SENSOR.
2. ALL EQUIPMENT AND INSTALLATION SHALL COMPLY WITH THE LATEST LOCAL CODES.
3. SMOKE DETECTOR TO BE SUPPLIED BY ELECTRICAL CONTRACTOR TO THE MECHANICAL CONTRACTOR FOR INSTALLATION INTO DUCT.
4. ELECTRICAL CONTRACTOR TO PROVIDE, WIRE AND TEST OPERATION OF DETECTOR AND NOTIFICATION DEVICES.
5. UPON ACTIVATION OF DUCT SMOKE DETECTOR THE HVAC UNIT SHALL SHUT DOWN. PROVIDE ADDITIONAL RELAYS REQUIRED TO ACCOMPLISH THIS TASK.

FIXTURE NOTE:

FIXTURE SHOWN ON THIS SHEET IS FOR REFERENCE ONLY. SEE ACTUAL FIXTURE SCHEDULE ELSE WHERE IN THIS DOCUMENTS FOR ACTUAL CATALOG NUMBER AND DESCRIPTION.

NEO

CHEHAYEB & ASSOCIATES, INC.
CONSULTING PROFESSIONAL ENGINEERS
3702 AZEELE ST. TAMPA, FL 33609
(813) 876-1415 www.chehayeb.com
LIC. #49521 SOUHEIL S. CHEHAYEB CERT. #7340
24-30

FWH Architects
3336 Grand Blvd. Suite 201
Holiday, Florida 34690
Ph. 727. 815. 3336
Fax 727. 815. 3337

TO THE BEST OF THE KNOWLEDGE OF THE ARCHITECTS AND ENGINEERS, PLANS AND SPECIFICATIONS COMPLY WITH THE APPLICABLE MINIMUM BUILDING CODES AND THE APPLICABLE MINIMUM FIRE SAFETY STANDARDS

SOUHEIL CHEHAYEB, P.E.
FL License No. 49521

no.	date	revision descriptions

STARBUCKS
SHELL CONSTRUCTION
1990 STATE ROAD 19
TAVARES, FL

03.25.2024
date

24007
comm. no.

FIXTURE INFORMATION

E1.2

3/21/2024 2:06 PM

FIXTURE SCHEDULE

LIGHTING

TYPE	MANUFACTURER	CATALOG NO.	VOLT	LAMPS	MOUNTING	REMARKS	WATT
A	LITHONIA	CSS-L48-4000LM-40K-80CRI-MVOLT	120	LED 4000LM 40K	SURFACE	4' LED GENERAL PURPOSE STRIP LIGHT	36
CA	LITHONIA	WF4-LED-30K40K50K-CBA-MVOLT-40CRI- 3000K	120	LED 750 DELIVERED LUMENS AT 3000K	RECESSED	EXTERIOR UNDER CANOPY	10
D	NOVUS DECOR	AR2000-94.5 INCH OPTION ARMOR OUTDOOR WALL SCONCE	120	LED (3000K)	SURFACE MOUNTED	EXTERIOR WALL SCONCE 94.5 INCH OPTION	90
ER	DUAL-LITE	OCR-D-B-0603L (CBA)	120	LED	EXTERIOR WALL MOUNT	REMOTE LED DOUBLE EMERGENCY HEAD	3
XO	DUAL-LITE	HCX-U-R-W-03L-RC12	120	LED	CEILING OR WALL ABOVE DOOR	COMBINATION THIN HEAD/ LED EXIT SIGN WITH INTEGRAL 90 MIN. BATTERY BACK-UP	4

CBA = COLOR AS SELECTED BY ARCHITECT.

NOTES:

1. ALL FLUORESCENT LIGHTING FIXTURES SHALL HAVE ENERGY SAVING LAMPS WITH ELECTRONIC BALLASTS AS SHOWN IN THE SCHEDULE.
2. PROVIDE NECESSARY MOUNTING HARDWARE AND ACCESSORIES FOR ALL FIXTURES. ACCESSORIES SHALL INCLUDE ALL HARDWARE TO MOUNT FIXTURES AS SHOWN ON SCHEDULES AND/OR DESCRIBED IN THE NOTES.
3. ALL FIXTURE SUBSTITUTIONS MUST BE SUBMITTED FOR APPROVAL (EQUALS ONLY).
4. ALL EMERGENCY, EXIT AND NIGHT LIGHT FIXTURES SHALL BE CONNECTED AHEAD OF LOCAL SWITCHES, RELAYS, OR CONTACTORS UNLESS OTHERWISE NOTED.
5. ALL PRE SUBMITTALS SHALL BE ACCOMPANIED WITH PHOTOMETRIC DATA.
6. EQUAL ACCEPTED MANUFACTURERS ARE; DAY-BRITE, LITHONIA, AND COLUMBIA. EVEN THOUGH THESE MANUFACTURERS ARE ACCEPTED, A TEN DAY PRIOR APPROVAL MUST BE SUBMITTED FOR EVALUATION.
7. CATALOG NUMBER ON FIXTURE SCHEDULE MAY NOT REFERENCE EVERY HARDWARE COMPONENT REQUIRED TO MOUNT FIXTURE AS INTENDED, VERIFY WITH MANUFACTURER FOR PROPER MOUNTING HARDWARE AND ANY ADDITIONAL COMPONENTS REQUIRED TO MOUNT FIXTURE AS INTENDED OR SHOWN.
8. LAMPS SHALL BE ENERGY SAVINGS, COLOR TEMPERATURE AS SHOWN ON SCHEDULE WITH MINIMUM CRI OF 82.
9. LAMPS SHALL BE BY SYLVANIA, G.E., OR PHILIPS, EXCEPT WHEN SUCH LAMPS ARE NOT AVAILABLE FROM THESE MANUFACTURERS, OR SPECIFIED OTHERWISE IN SCHEDULE.
10. SHOP DRAWINGS SHALL INCLUDE:
    A. COMPLETE FIXTURE CUT SHEETS INCLUDING PHOTOMETRICS.
    B. BALLAST CUT SHEETS.
    C. WHERE COLOR SELECTION IS REQUIRED, COLOR CHART SHALL BE PROVIDED WITH THE SHOP DRAWINGS FOR SELECTION BY ARCHITECT/OWNER.
    D. LAMP CUT SHEETS.

    NOTES:
    1. SHOP DRAWINGS SHALL BE PREPARED BY MANUFACTURER REPRESENTATIVE, AND NOT BY CONTRACTOR.
    2. CONTRACTOR SHALL PROVIDE ALL OF THE REQUIRED DATA LISTED ABOVE WITH THE SHOP DRAWINGS.
11. EMERGENCY LIGHTING SYSTEM INCLUDING BUT NOT LIMITED TO BATTERY BALLAST IN THE FLUORESCENT FIXTURES SHALL BE UL 924 LISTED AND COMPLY WITH NFPA 101 LIFE SAFETY CODE SECTION 7.9. THE SYSTEM SHALL BE PERIODICALLY TESTED PER NFPA 101 SECTION 7.9.3.1.1.
12. ALL LINEAR LUMINARIES SHALL COMPLY WITH NEC 410.73 (G) FOR BALLAST DISCONNECT.
13. CONTRACTOR SHALL COORDINATE WITH CANOPY INSTALLER FOR FIXTURE LOCATION AND DRIVER LOCATION AND PROVIDE ACCORDINGLY.

S4A

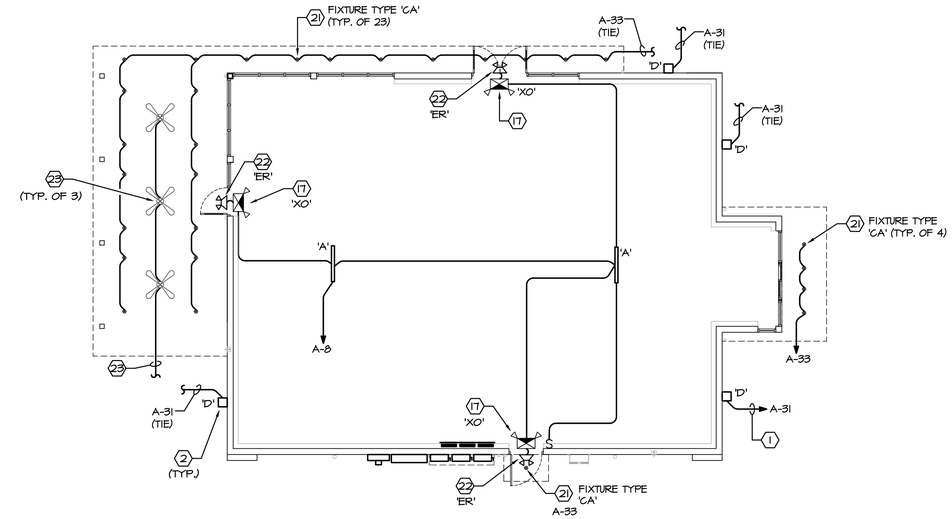

NORTH

LIGHTING PLAN

SCALE: 1/8" = 1'-0"

WIRING DETAILS

MECHANICAL EQUIPMENT

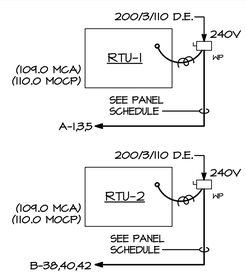

NOTES:

1. VERIFY NAMEPLATE RATINGS, LOCATIONS, AND POINT OF POWER CONNECTIONS PRIOR TO ROUGH-IN.
2. DO NOT LOCATE DISCONNECT SWITCHES OVER UNIT ACCESS PANELS.
3. PROVIDE A 3/4" EMPTY CONDUIT THROUGH INACCESSIBLE LOCATIONS (i.e., WALLS, UNDER SLAB) FOR CONTROL WIRING. COORDINATE WITH MECH. PLANS.
4. EQUIP. REQUIREMENTS ARE FOR MANUFACTURER AND MODEL NUMBER LISTED ON MECH. PLANS. THE MECH. CONTRACTOR SHALL BEAR ANY ADDITIONAL COSTS INCURRED IF ALTERNATE EQUIPMENT IS PROVIDED.
5. VERIFY ACTUAL EQUIPMENT NAMEPLATE MAXIMUM OVERCURRENT PROTECTION RATING AND ADJUST FUSE SIZE IN DISCONNECT ACCORDINGLY.
6. ALL FUSED DISCONNECTS SHALL BE PROVIDED WITH CLASS 'R' FUSES AND CLASS 'R' REJECTION CLIPS.

M1A

LIGHTING CONTROL NOTES:

1. TIME CLOCK AND LIGHTING CONTACTORS SHOWN IN THESE DOCUMENTS FOR CONTROLLING THE OUTDOOR SITE LIGHTING AND THE EXTERIOR BUILDING LIGHTS SHALL BE PROVIDED BY THE SHELL CONTRACTOR UNDER THIS PHASE OF THE WORK.
2. BUILDING LIGHTING CONTROL PANEL SHALL BE PROVIDED BY THE INTERIOR DESIGN TEAM, TO CONTROL THE INTERIOR BUILDING LIGHTING, UNDER THE FIT UP DESIGN PACKAGE.
3. THE SHELL CONTRACTOR SHALL COORDINATE WITH THE INTERIOR CONTRACTOR TO PROVIDE (2) POINTS OF CONTROL IN THE MAIN BUILDING LIGHTING CONTROL PANEL TO CONTROL THE TWO LIGHTING CONTRACTORS SHOWN IN THE SHELL DOCUMENTS AND DELETING THE TIME CLOCK. COORDINATE ALL WORK WITH STARBUCKS PROJECT MANAGER FOR TIE IN POINTS AND METHOD OF CONTROL, AND PROVIDE ACCORDINGLY.

NOTES

KEY

1. CIRCUIT(S) TO BE CONTROLLED BY PHOTOCELL.
2. EXTERIOR MOUNTED LIGHT FIXTURE. SEE ARCHITECTURAL ELEVATION FOR EXACT LOCATION.
3. PROVIDE WEATHERPROOF JUNCTION BOX WITH 1" CONDUIT STUBBED IN TO BEAM SPACE FOR TENANT SIGNAGE. COORDINATE WITH SIGN CONTRACTOR PRIOR TO ROUGH-IN.
4. SHOW WINDOW RECEPTACLES IN ACCORDANCE WITH NEC 210.62 TO BE FURNISHED AND INSTALLED UNDER TENANT FIT-UP DRAWINGS.
5. ELECTRICAL CONTRACTOR SHALL PROVIDE THREE SPARE 1" CONDUITS WITH PULLWIRE RUN THRU FOUNDATION WALL OUT REAR OF BUILDING AND CAPPED 18" A.F.G. CONDUIT SHALL BE TERMINATED ABOVE CEILING. VERIFY STUB-UP LOCATIONS ON SITE WITH TENANT.
6. ELECTRIC SERVICE LOCATION. SEE RISER DIAGRAM ON SHEET E3.0.
7. TELEPHONE AND CABLE TV SERVICE STUB-UP. FIELD COORDINATE EXACT LOCATION PRIOR TO ROUGH-IN. CONDUITS TO BE STUBBED UP AT A LOCATION COORDINATED WITH THE TENANT BUILD-OUT DOCUMENTS.
8. DETECTOR LOOP CENTERED ON THE WINDOW 2" BELOW FINISH GRADE. ROUTE (1) 1" CONDUIT WITH PULL WIRE TO DRIVE THRU WINDOW AND TERMINATE NEAR TIME SIGNAL PROCESSOR (TSP). (FIELD COORDINATE EXACT LOCATION WITH TENANT PRIOR TO ROUGH-IN.
9. DRIVE THRU AUTOMATIC SLIDER WINDOW. PROVIDE (1) 120V., CIRCUIT WITH A J-BOX. SEE MANUFACTURER SPECIFICATIONS FOR FURTHER REQUIREMENTS.
10. WEATHERPROOF, GFI, WEATHER RESISTANCE TYPE, DUPLEX RECEPTACLE MOUNTED AT RTU. TIE TO INDICATED CIRCUIT.
11. HVAC ROOF TOP UNIT. REFER TO MECHANICAL PLANS FOR ADDITIONAL INFORMATION. SEE DETAIL ON THIS SHEET.
12. (2) 1" CONDUIT WITH PULLWIRE TO BE RUN THROUGH FOUNDATION WALL TO FRONT OF BUILDING PATIO SEATING AREA. VERIFY LOCATIONS FOR STUB-UP WITH TENANT'S REPRESENTATIVE. CONDUIT SHALL TERMINATE AT THE DESIGNATED PANEL.
13. DUCT SMOKE DETECTOR IN SUPPLY AIR STREAM. SEE DETAIL ON SHEET E1.2.
14. 120V., CIRCUIT FROM A MAINTENANCE SWITCH AT THE EXHAUST FAN TO A J-BOX ABOVE CEILING AT THE SOURCE PANEL LOCATION AND EXTENDED TO THE SOURCE PANEL, FOR FUTURE CONTROL BY TENANT TI PLANS. MAKE ALL FINAL TERMINATIONS AS REQUIRED.
15. PROVIDE 120V., 20A DUPLEX OUTLET FOR DRIVE-THRU ELECTRIC RELEASE AUTOMATIC SLIDER WINDOW, MOUNT AT 80" A.F.F. SEE MANUFACTURER SPECIFICATION FOR FURTHER REQUIREMENTS. COORDINATE LOCATION WITH OWNER'S REPRESENTATIVE.
16. REMOTE TEST SWITCHES. FIELD VERIFY EXACT LOCATION AND MOUNTING HEIGHT PRIOR TO ROUGH-IN. SEE DETAIL ON SHEET E3.0.
17. COMBINATION EXIT/EMERGENCY LIGHT TO BE CONNECTED TO LOCAL LIGHTING CIRCUIT AHEAD OF SWITCHING OR CONTROL.
18. 3-HP 208V, 1-PHASE BOOSTER PUMP, WHERE REQUIRED. PROVIDE 60A, 2-POLE FUSED DISCONNECT, 240V., NEMA 1 FUSED PER NAME PLATE RATING OF MOTOR. FIELD VERIFY EXACT PUMP LOCATION PRIOR TO ROUGH-IN.
19. PROVIDE (1) 1-1/2" CONDUIT FROM DATA RACK AT MANAGERS WORK STATION TO DRIVE THRU BUMP-OUT. FIELD COORDINATE EXACT TERMINATION POINT AND ROUTING PRIOR TO ROUGH-IN.
20. WEATHERPROOF BOX WITH COVER FOR IRRIGATION CONTROLLER. FIELD VERIFY EXACT LOCATION. TIE TO INDICATED CIRCUIT. MAKE FINAL TERMINATION TO THE CONTROLLER AS REQUIRED.
21. RECESSED LIGHT FIXTURES. TIE TO THE CIRCUIT AND CONTROL INDICATED. ALL CONDUITS AND WIRING SHALL BE FULLY CONCEALED IN THE CANOPY.
22. REMOTE OUTDOOR EMERGENCY FIXTURE SURFACE MOUNTED TO THE BOTTOM OF THE CANOPY. ALL CONDUITS AND WIRING SHALL BE FULLY CONCEALED IN CANOPY.
23. PROVIDE J-BOX FOR PADDLE FAN SUPPORTED PER N.E.C. AND LISTED FOR FAN INSTALLATION. PROVIDE 1/2" CONDUIT WITH WIRE BETWEEN BOXES AND 1/2" CONDUIT WITH PULL WIRE TO THE INSIDE OF THE STORE CEILING STRUCTURE FOR POWER AND CONTROL BY OTHERS. ALL CONDUITS AND WIRING SHALL BE FULLY CONCEALED IN SOFFIT.
24. PATIO RECEPTACLE. PROVIDE 20AMP USB WEATHER RESISTANCE OUTLET WITH A "WET WHILE IN USE" COVER IN A NEMA 3R BELL BOX. MOUNT BOX BETWEEN, AND SUPPORTED BY VERTICAL RAILING. FIELD COORDINATE EXACT LOCATION PRIOR TO ROUGH-IN. POWERED BY A GFCI BREAKER.
25. FUTURE, TENANT PROVIDED, DOOR OPERATOR. CONTRACTOR TO PROVIDE, J-BOX WITH 120V., AS REQUIRED. TIE TO INDICATED CIRCUIT.
26. FUTURE, TENANT PROVIDED, ACTUATOR-JAMB PUSH PLATE. CONTRACTOR TO PROVIDE CONDUIT WITH PULL WIRE TO DOOR OPERATOR FOR CONTROL WIRING AS REQUIRED.
27. THIS SIGN IS LOCATED ON TOP OF THE CANOPY. CONTRACTOR SHALL VERIFY EXACT LOCATION AND ALSO COORDINATE WITH THE CANOPY VENDOR FOR LOCATION OF THE J-BOX AND PROVIDE ACCORDINGLY. CONDUIT SHALL BE FULLY CONCEALED IN THE CANOPY.

N4A

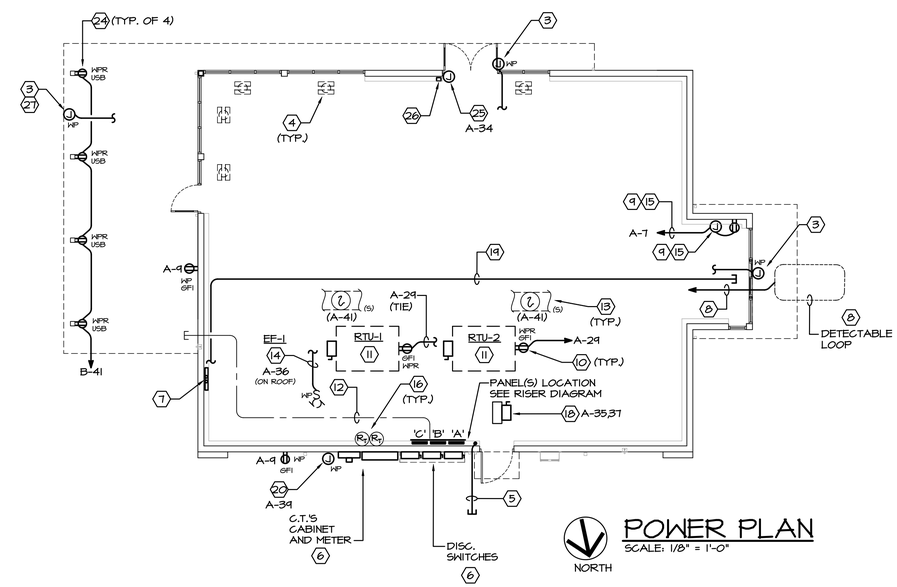

NORTH

POWER PLAN

SCALE: 1/8" = 1'-0"

EQUIPMENT STUB-UP NOTE

ELECTRICAL CONTRACTOR SHALL OBTAIN A COPY OF TENANT DRAWING I-III FOR LAYOUT OF CONDUIT STUB-UPS AT EQUIPMENT LOCATIONS. PROVIDE PULLWIRE IN ALL CONDUIT STUB-UP RUNS.

CONDUITS TO BE RUN UNDERSLAB TO ADJACENT FULL HEIGHT WALL AND UP IN FURRED OUT SPACE TO ABOVE DROP CEILING FOR FUTURE WIRING.

CONDUIT STUB-UP NOTE:

COORDINATE ALL STUB-UP LOCATIONS AND REQUIREMENTS WITH TENANT PLANS PRIOR TO ROUGH-IN. PROVIDE PULLWIRE FOR ALL EMPTY CONDUITS. CAP AND LABEL EACH CONDUIT STUB-UP.

WORK SHOWN UNDER THIS PERMIT IS FOR SHELL BUILDING ONLY, ALL ADDITIONAL INTERIOR WORK TO BE PERFORMED UNDER SEPARATE PERMIT, PRIOR TO TENANT OCCUPYING SPACE.

CHEHAYEB & ASSOCIATES, INC.
CONSULTING PROFESSIONAL ENGINEERS
3702 AZEELE ST.
TAMPA, FL 33609
(813) 876-1415
www.chehayeb.com
LIC. #49521 SOUHEIL S. CHEHAYEB CERT. #7340
24-30

FWH Architects
3336 Grand Blvd. Suite 201
Holiday, Florida 34690
Ph. 727. 815. 3336
Fax 727. 815. 3337

TO THE BEST OF THE KNOWLEDGE OF THE ARCHITECTS AND ENGINEERS, PLANS AND SPECIFICATIONS COMPLY WITH THE APPLICABLE MINIMUM BUILDING CODES AND THE APPLICABLE MINIMUM FIRE SAFETY STANDARDS

SOUHEIL CHEHAYEB, P.E.
FL License No. 49521

no.	date	revision descriptions

STARBUCKS
SHELL CONSTRUCTION
1990 STATE ROAD 19
TAVARES, FL

03.25.2024
date

24007
comm. no.

LIGHTING AND POWER PLANS

E2.0

3/21/2024 2:06 PM

GROUNDING DETAIL

SERVICE EQUIPMENT

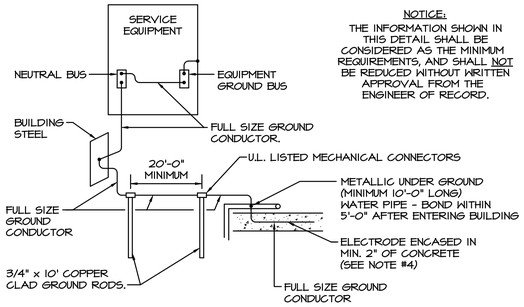

NOTICE:
THE INFORMATION SHOWN IN THIS DETAIL SHALL BE CONSIDERED AS THE MINIMUM REQUIREMENTS, AND SHALL NOT BE REDUCED WITHOUT WRITTEN APPROVAL FROM THE ENGINEER OF RECORD.

NOTES:

1. FULL SIZE GROUND MEANS THAT GROUND CONDUCTOR SIZE SHALL BE AS SHOWN ON SERVICE EQUIPMENT ON THE POWER RISER DIAGRAM.
2. AFTER GROUNDING SYSTEM IS INSTALLED, GROUND RESISTANCE SHALL BE MEASURED, TO ASSURE THAT GROUND VALUE OF 10 OHM MAXIMUM RESISTANCE IS ACHIEVED. IF NOT, ADDITIONAL GROUNDING SHALL BE PROVIDED TO MEET THE SPECIFIED VALUE.
3. ALL CONNECTIONS TO GROUND RODS SHALL BE U.L. LISTED MECHANICAL CONNECTIONS.
4. GROUND CONDUCTOR SHALL BE LOCATED WITHIN OR NEAR BOTTOM OF CONCRETE FOUNDATION OR FOOTING THAT IS IN DIRECT CONTACT WITH THE EARTH, AND SHALL CONSIST OF AT LEAST 20 FEET OF ONE OR MORE STEEL REINFORCING BARS OR RODS OF NOT LESS THAN 1/2 INCH DIAMETER, OR OF AT LEAST 20 FEET OF BARE COPPER CONDUCTOR.

P14A

INSTALLATION DIAGRAM

SURGE SUPP

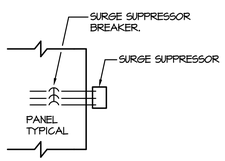

SURGE SUPPRESSOR WIRING NOTES:

1. WHERE A SURGE SUPPRESSOR IS CONNECTED TO A BREAKER IN A PANELBOARD OR A DISTRIBUTION PANELBOARD THE LEAD LENGTH FROM THE BREAKER TO THE SUPPRESSOR SHALL BE KEPT TO A MINIMUM. AND THE SUPPRESSOR SHALL BE MOUNTED ON THE SAME SIDE AS THE BREAKER SERVING THAT SUPPRESSOR. ALL BREAKERS FEEDING SUPPRESSION UNITS SHALL BE PROVIDED WITH LOCK ON HANDLE.
2. THE DISTANCE BETWEEN BREAKER (IN PANEL POWERING SURGE SUPPRESSOR UNIT) AND THE SURGE SUPPRESSOR UNIT SHALL NOT BE MORE THAN 12", NO EXCEPTIONS.

P44A

EXTERIOR LIGHTING CONTROL DETAIL PHOTOCELL/TIMECLOCK CONTROL DIAGRAM

TYPICAL

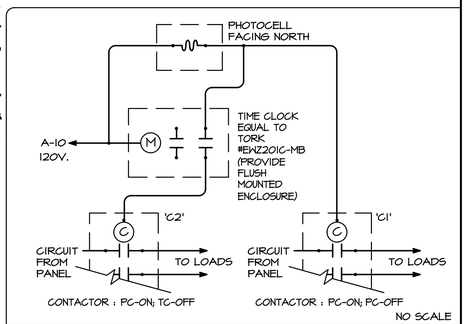

NOTES:

1. TIME CLOCK SHALL BE SET FOR "ON" AT 4:00 PM AND "OFF" AS DIRECTED BY OWNER. THESE SETTINGS WILL ALLOW THE PHOTOCELL TO PERFORM THE "ON" FUNCTION OF ALL THE EXTERIOR LIGHTING, AND ALLOW FOR TIME OVERRIDE TO SHUT OFF PRE-SELECTED LIGHTING AT ONE HOUR AFTER STORE CLOSING.
2. TIME CLOCK FUNCTION SHALL INCLUDE:
   A. SEVEN DAY CLOCK.
   B. CAPABLE OF BEING SET FOR SEVEN DIFFERENT DAY TYPES PER WEEK.
   C. HAVE AUTOMATIC HOLIDAY SET BACK FEATURES.
   D. MINIMUM OF 10 HOURS OF RESERVE POWER, UPON POWER FAILURE.
   E. TWO CHANNEL MINIMUM.
   F. ASTRONOMIC TIME CLOCK.
   G. TORK CAT. NO. LISTED ABOVE COMPLY WITH ALL THE REQUIRED FEATURES LISTED ABOVE AND COMPLY WITH FBC 2020 WITH 7TH EDITION ENERGY CONSERVATION SECTION C405.2.6.4

- PANEL: A

MANUFACTURER: SIEMENS — LOCATION: SEE PLANS — SPECIAL: -

PANEL TYPE: PANEL BOARD — FED FROM: DISCONNECT 'A' 120/208 VOLTS 3 PHASE 4 WIRE/SOLID NEUTRAL — AMPERE BUS 225 — AMPERE MAIN 225

42K INTERRUPTING CAPACITY (AIC) — RATED: SERIES: X FULL: - — MOUNTING: FLUSH X SURFACE - — MAIN TYPE LUGS

No.	KVA	NOTE	WIRE	GND	COND	Description	LD	BRK	A	B	C	BRK	LD	Description	WIRE	GND	COND	NOTE	KVA	No.
1	13.1	-					A3		13.1			20	-	SPARE	-	-	-	-	0.0	2
3	13.1	-	3#1	1#6	1-1/2"	RTU-1	A3	125		13.1		20	-	SPARE	-	-	-	-	0.0	4
5	13.1	-					A3				13.1	20	-	SPARE	-	-	-	-	0.0	6
7	0.6	-	2#12	1#12	1/2"	AUTOMATIC SLIDE WINDOW	M	20	1.0			20	L	INTERIOR LIGHTING	2#12	1#12	1/2"	-	0.4	8
9	0.4	-	2#12	1#12	1/2"	EXTERIOR RECEPT	M	20		0.8		20(L)	M	TIME CLOCK POWER	2#12	1#12	1/2"	-	0.4	10
11	0.0	-	-	-	-	SPARE	-	20			0.0	20	-	SPARE	-	-	-	-	0.0	12
13	0.0	-					-		0.0			20	-	SPARE	-	-	-	-	0.0	14
15	0.0	-	-	-	-	SPARE	-	40		0.0		20	-	SPARE	-	-	-	-	0.0	16
17	0.5	C1					L				0.5	20	-	SPARE	-	-	-	-	0.0	18
19	0.5	C1	(*)	(*)	(*)	SITE LIGHTING	L	20	0.5			20	-	SPARE	-	-	-	-	0.0	20
21	0.5	C2					L			0.5		20	-	SPARE	-	-	-	-	0.0	22
23	0.5	C2	(*)	(*)	(*)	SITE LIGHTING	L	20			0.5	20	-	SPARE	-	-	-	-	0.0	24
25	0.0	-					-		0.0			20	-	SPARE	-	-	-	-	0.0	26
27	0.0	-	-	-	-	SPARE	-	50		0.0		20	-	SPARE	-	-	-	-	0.0	28
29	0.4	-	2#12	1#12	1/2"	MAINTENANCE RECEPT	M	20			0.4	20	-	SPARE	-	-	-	-	0.0	30
31	0.8	C1	2#12	1#12	1/2"	SCONCE LIGHTING	L	20	0.8			20	-	SPARE	-	-	-	-	0.0	32
33	0.1	C2	2#12	1#12	1/2"	EXTERIOR LIGHTING	L	20		0.7		20(L)	M	AUTO DOOR POWER	2#12	1#12	1/2"	-	0.6	34
35	1.8	-					M	40			2.3	20	M	EXHAUST FAN	2#12	1#12	1/2"	-	0.5	36
37	1.8	-	2#8	1#8	1"	BP-1	M		1.8				-					-	0.0	38
39	0.4	-	2#12	1#12	1/2"	IRRIGATION CONTROLLER	M	20		0.4		30(L)	-	SURGE SUPPRESSION	4#10	1#10	3/4"	-	0.0	40
41	0.4	-	2#12	1#12	1/2"	DUCT SMOKE DETECTOR	M	20(L)			0.4		-					-	0.0	42
43	0.0	-					-	20	0.0			20	-	SPARE	-	-	-	-	0.0	44
45	0.0	-	-	-	-	SPARE	-	20		0.0		20	-	SPARE	-	-	-	-	0.0	46
47	0.0	-	-	-	-	SPARE	-	20			0.0	20	-	SPARE	-	-	-	-	0.0	48
49	0.0	-	-	-	-	SPARE	-	20	0.0			20	-	SPARE	-	-	-	-	0.0	50
51	0.0	-	-	-	-	SPARE	-	20		0.0		20	-	SPARE	-	-	-	-	0.0	52
53	0.2	-	(*)	(*)	(*)	LIGHT AT THE DUMPSTER	L	20			0.2	20	-	SPARE	-	-	-	-	0.0	54

LEGEND/NOTES:
20(L) = PROVIDE HANDLE LOCKING DEVICE FOR THIS BREAKER

	A	B	C
KVA SUB TOTALS:	17.2	15.5	17.4
- -	0.0	0.0	0.0
GRAND TOTAL:	17.2	15.5	17.4

CONNECTED LOAD KVA: 50.1
STD. DEMAND FACTOR (1.0): 46.6
+ LTG DEMAND (1.25 LTG): 4.4
+ KITCHEN DEMAND: 0.0
TOTAL DEMAND KVA: 51.0
DEMAND AMPERES: 141.5

KITCHEN MULTIPLIER PER NEC 2020 TABLE 220.56

NOTE FOR ALL SERIES RATED EQUIPMENT

(PER 2017 N.E.C. SECTION 110.22 AND 240.86 (B) & (C)

WHERE CIRCUIT BREAKERS OR FUSES ARE APPLIED IN COMPLIANCE WITH THE SERIES COMBINATION RATINGS MARKED ON THE EQUIPMENT BY THE MANUFACTURER, THE EQUIPMENT ENCLOSURE(S) SHALL BE LEGIBLY MARKED IN THE FIELD TO INDICATE THE EQUIPMENT HAS BEEN APPLIED WITH A SERIES COMBINATION RATING. THE MARKING SHALL BE READILY VISIBLE AND STATE:

CAUTION - SERIES COMBINATION SYSTEM RATED —K AMPERES. IDENTIFIED REPLACEMENT COMPONENTS REQUIRED

AS A PART OF THE MARKING ON THE PANEL IT SHALL ALSO IDENTIFY REPLACEMENT COMPONENTS REQUIRED.

N1A

EXAMPLES
REQUIRED EQUIPMENT SIGNAGE

BASED ON 2020 N.E.C. ARTICLES 110.22 AND 110.24

BUILDING MAIN PANEL:

PANEL 'MDP'
277/480V., 3-PHASE
AVAILABLE FAULT CURRENT: 27,315 AMPS
CALCULATION DATE: 01-01-2024

BRANCH PANEL:

PANEL 'A1'
277/480V., 3-PHASE
FED FROM ROOM B100
PANEL 'DP' CIRCUIT 5

PANEL 'L1'
120/208V., 3-PHASE
FED FROM ROOM B100
TRANSFORMER T1 AND
PANEL 'DL' CIRCUIT 12

DISCONNECT SWITCH / ENCLOSED CIRCUIT BREAKER:

SERVES CU-4
FED FROM ROOM B100
PANEL 'H2' CIRCUIT 8,10,12

N44C

NOTES

KEY

1. (2) SETS OF 3-1/2" CONDUITS WITH (4) #350 MCM CU. IN EACH.
2. (A) DEDUCT ALTERNATE: CONTRACTOR SHALL PROVIDE A DEDUCT ALTERNATE TO USE ALUMINUM IN LIEU OF COPPER, AS FOLLOWS:
   (2) SETS OF 3-1/2" CONDUITS WITH 4 - #500 MCM AL. (XHHW) IN EACH. SEE NOTES SHEET E1.1 FOR ALUMINUM SPECIFICATIONS.
3. #2/0 CU. GROUND. SEE GROUNDING DETAIL ON THIS SHEET.
4. 120/208V, 3-PHASE C.T.'S CABINET FURNISHED AND INSTALLED BY CONTRACTOR PER UTILITY COMPANY SPECIFICATIONS AND REQUIREMENTS.
5. (4) #3/0 CU. AND (1) #6 E.G. IN 2-1/2" CONDUIT.
6. 3-PH., 4-W, SERVICE ENTRANCE RATED, NEMA 3R, 200A, FUSED DISCONNECT, FUSED AT 200 AMPS, HEAVY DUTY, SWITCH WITH SOLID NEUTRAL, CLASS 'J' FUSES. DISCONNECT SHALL BE LOCKABLE IN THE ON OR OFF POSITIONS.
7. TIME CLOCK. SEE DETAIL THIS SHEET.
8. 120/208V., 3-PHASE PAD MOUNTED TRANSFORMER. SEE ELECTRICAL SITE PLAN THIS SHEET E1.0.
9. LIGHTNING SURGE SUPPRESSOR. EQUAL TO SURGE SUPPRESSION INC. STM-30D-3Y1-P (120/208V, 3-PHASE, 5 WIRE) WITH FLUSH MOUNTED PLATE. SEE WIRING DETAIL THIS SHEET.
10. PHOTOCELL (120V) MOUNTED ON ROOF FACING NORTH. SEE CONTROL DETAIL THIS SHEET.
11. ELECTRICALLY HELD 8 POLE FLUSH MOUNTED LIGHTING CONTACTOR EQUAL TO SQUARE 'D' LF-80-V02, TO CONTROL EXTERIOR LIGHTING. SEE CONTROL DETAIL THIS SHEET.
12. (4) #3/0 CU. AND (1) #2/0 LINE SIDE BONDING JUMPER IN 2-1/2" CONDUIT.
13. 12"x12"x8' LENGTH, N3R WIREWAY WITH (3) LOCKABLE, TAMPER PROOF HASPS AT THE BOTTOM OF THE WIRE WAY. COORDINATE WITH CITY OF TALLAHASSEE UTILITY (COT) FOR TYPE AND ANY ADDITIONAL REQUIREMENTS AND PROVIDE ACCORDINGLY. PROVIDE POLARIS TYPE CONNECTORS INCLUDING NEUTRAL AND GROUNDS.
14. (2) SETS OF 3-1/2" CONDUITS WITH 4-#350 MCM CU, AND (1) #2/0 LINE SIDE BONDING JUMPER IN EACH.
15. C.T.'S METER BY CONTRACTOR PER UTILITY COMPANY REQUIREMENTS.
16. 1-1/2" CONDUIT BETWEEN C.T. CABINET AND C.T. METER PER UTILITY COMPANY REQUIREMENT FOR THEIR USE.

N4A

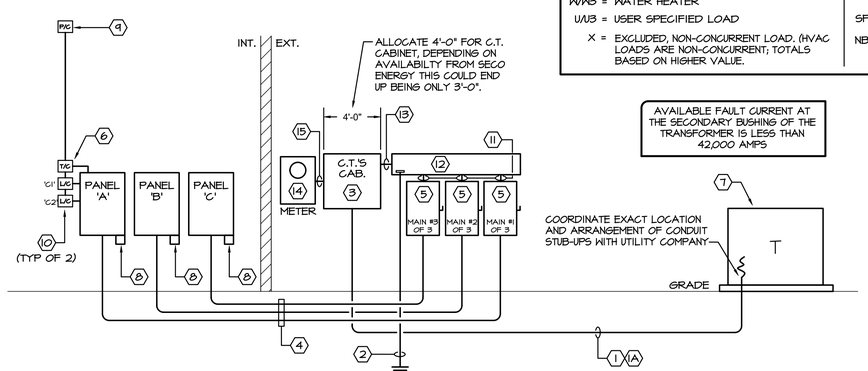

AVAILABLE FAULT CURRENT AT THE SECONDARY BUSHING OF THE TRANSFORMER IS LESS THAN 42,000 AMPS

POWER RISER DIAGRAM

NO SCALE — AFC = AVAILBLE FAULT CURRENT AT THIS LOCATION

- PANEL: B

MANUFACTURER: SIEMENS — LOCATION: SEE PLANS — SPECIAL: -

PANEL TYPE: PANEL BOARD — FED FROM: DISCONNECT 'B' 120/208 VOLTS 3 PHASE 4 WIRE/SOLID NEUTRAL — AMPERE BUS 225 — AMPERE MAIN 225

42K INTERRUPTING CAPACITY (AIC) — RATED: SERIES: X FULL: - — MOUNTING: FLUSH X SURFACE - — MAIN TYPE LUGS

No.	KVA	NOTE	WIRE	GND	COND	Description	LD	BRK	A	B	C	BRK	LD	Description	WIRE	GND	COND	NOTE	KVA	No.
1	0.0	-					-		0.0			20	-	SPARE	-	-	-	GFI	0.0	2
3	0.0	-	-	-	-	SPARE	-	20		0.0		20	-	SPARE	-	-	-	GFI	0.0	4
5	0.0	-					-				0.0	20	-	SPARE	-	-	-	GFI	0.0	6
7	0.0	GFI	-	-	-	SPARE	-	40	0.0			20	-	SPARE	-	-	-	GFI	0.0	8
9	0.0						-			0.0		20	-	SPARE	-	-	-	GFI	0.0	10
11	0.0	GFI	-	-	-	SPARE	-	40			0.0	20	-	SPARE	-	-	-	GFI	0.0	12
13	0.0						-		0.0			20	-	SPARE	-	-	-	GFI	0.0	14
15	0.0	GFI	-	-	-	SPARE	-	50		0.0		20	-	SPARE	-	-	-	GFI	0.0	16
17	0.0						-				0.0	20	-	SPARE	-	-	-	GFI	0.0	18
19	0.0	GFI	-	-	-	SPARE	-	30	0.0			20	-	SPARE	-	-	-	GFI	0.0	20
21	0.0						-			0.0		20	-	SPARE	-	-	-	GFI	0.0	22
23	0.0	GFI	-	-	-	SPARE	-	30			0.0	20	-	SPARE	-	-	-	GFI	0.0	24
25	0.0						-		0.0			20	-	SPARE	-	-	-	GFI	0.0	26
27	0.0	GFI	-	-	-	SPARE	-	40		0.0		20	-	SPARE	-	-	-	GFI	0.0	28
29	0.0						-				0.0	20	-	SPARE	-	-	-	GFI	0.0	30
31	0.0	GFI	-	-	-	SPARE	-	30	0.0				-							
33	0.0	GFI	-	-	-	SPARE	-	20		0.0		30(L)	-	SURGE SUPPRESSION	4#10	1#10	3/4"	-	0.0	34
35	0.0	GFI	-	-	-	SPARE	-	20			0.0		-					-	0.0	36
37	0.0		-	-	-	SPARE	-		13.1			125	A3	RTU-2	3#1	1#6	1-1/2"	-	13.1	38
39	0.0	GFI	-	-	-	SPARE	-	20		13.1			A3					-	13.1	40
41	0.8	GFI	2#10	1#10	3/4"	PATIO RECEPTACLES	R	20			13.9		A3					-	13.1	42

LEGEND/NOTES:
20(L) = PROVIDE HANDLE LOCKING DEVICE FOR THIS BREAKER

	A	B	C
KVA SUB TOTALS:	13.1	13.1	13.9
- -	0.0	0.0	0.0
GRAND TOTAL:	13.1	13.1	13.9

CONNECTED LOAD KVA: 40.1
STD. DEMAND FACTOR (1.0): 40.1
+ LTG DEMAND (1.25 LTG): 0.0
+ KITCHEN DEMAND: 0.0
TOTAL DEMAND KVA: 40.1
DEMAND AMPERES: 111.3

KITCHEN MULTIPLIER PER NEC 2020 TABLE 220.56

- PANEL: C

MANUFACTURER: SIEMENS — LOCATION: SEE PLANS — SPECIAL: -

PANEL TYPE: PANEL BOARD — FED FROM: DISCONNECT 'C' 120/208 VOLTS 3 PHASE 4 WIRE/SOLID NEUTRAL — AMPERE BUS 225 — AMPERE MAIN 225

42K INTERRUPTING CAPACITY (AIC) — RATED: SERIES: X FULL: - — MOUNTING: FLUSH X SURFACE - — MAIN TYPE LUGS

No.	KVA	NOTE	WIRE	GND	COND	Description	LD	BRK	A	B	C	BRK	LD	Description	WIRE	GND	COND	NOTE	KVA	No.
1	0.0	GFI	-	-	-	SPARE	-	20	0.0			20	-	SPARE	-	-	-	GFI	0.0	2
3	0.0	GFI	-	-	-	SPARE	-	20		0.0		20	-	SPARE	-	-	-	GFI	0.0	4
5	0.0	GFI	-	-	-	SPARE	-	20			0.0	20	-	SPARE	-	-	-	GFI	0.0	6
7	0.0	GFI	-	-	-	SPARE	-	20	0.0			20	-	SPARE	-	-	-	GFI	0.0	8
9	0.0	GFI	-	-	-	SPARE	-	20		0.0		20	-	SPARE	-	-	-	GFI	0.0	10
11	0.0	GFI	-	-	-	SPARE	-	20			0.0	20	-	SPARE	-	-	-	GFI	0.0	12
13	0.0	GFI	-	-	-	SPARE	-	20	0.0			20	-	SPARE	-	-	-	GFI	0.0	14
15	0.0	GFI	-	-	-	SPARE	-	20		0.0		20	-	SPARE	-	-	-	GFI	0.0	16
17	0.0	GFI	-	-	-	SPARE	-	20			0.0	20	-	SPARE	-	-	-	GFI	0.0	18
19	0.0	GFI	-	-	-	SPARE	-	20	0.0			40	-	SPARE	-	-	-	GFI	0.0	20
21	0.0	GFI	-	-	-	SPARE	-	20		0.0			-						0.0	22
23	0.0	GFI	-	-	-	SPARE	-	20			0.0	20	-	SPARE	-	-	-	GFI	0.0	24
25	0.0	-	-	-	-	SPARE	-	20	0.0			20	-	SPARE	-	-	-	GFI	0.0	26
27	0.0	GFI	-	-	-	SPARE	-	20		0.0		20	-	SPARE	-	-	-	-	0.0	28
29	0.0	GFI	-	-	-	SPARE	-	20			0.0	20	-	SPARE	-	-	-	-	0.0	30
31	0.0	-	-	-	-	SPARE	-	20	0.0			20	-	SPARE	-	-	-	-	0.0	32
33	0.0	-					-			0.0		20	-	SPARE	-	-	-	-	0.0	34
35	0.0	-	-	-	-	SPARE	-	40			0.0	20	-	SPARE	-	-	-	-	0.0	36
37	0.0	-					-		0.0				-						0.0	38
39	0.0	-	-	-	-	SPARE	-	20		0.0		30(L)	-	SURGE SUPPRESSION	4#10	1#10	3/4"	-	0.0	40
41	0.0	-	-	-	-	SPARE	-	20			0.0		-					-	0.0	42

LEGEND/NOTES:
20(L) = PROVIDE HANDLE LOCKING DEVICE FOR THIS BREAKER

	A	B	C
KVA SUB TOTALS:	0.0	0.0	0.0
- -	0.0	0.0	0.0
GRAND TOTAL:	0.0	0.0	0.0

CONNECTED LOAD KVA: 0.0
STD. DEMAND FACTOR (1.0): 0.0
+ LTG DEMAND (1.25 LTG): 0.0
+ KITCHEN DEMAND: 0.0
TOTAL DEMAND KVA: 0.0
DEMAND AMPERES: 0.0

KITCHEN MULTIPLIER PER NEC 2020 TABLE 220.56

PANEL SCHEDULE LEGEND

LOAD CODES

- A/A3 = HVAC LOAD
- K# = KITCHEN LOADS (1, 2 OR 3 CIRCUIT)
- L/L3 = LIGHTING LOAD
- M/M3 = MISCELLANEOUS LOAD
- R = RECEPTACLE LOAD
- F/F3 = REFRIGERATION LOAD
- W/W3 = WATER HEATER
- U/U3 = USER SPECIFIED LOAD
- X = EXCLUDED, NON-CONCURRENT LOAD. (HVAC LOADS ARE NON-CONCURRENT; TOTALS BASED ON HIGHER VALUE.

DESIGNATION

- IG = ISOLATED GROUND CIRCUIT
- GFI = GROUND FAULT INTERRUPTER
- C# = CONTACTOR CONTROLLED (#) INDICATES CONTACTOR NUMBER
- PC = PHOTOCELL CONTROLLED
- R# = CONTROLLED BY LCP. (#) INDICATES RELAY NUMBER
- SF = SUB-FEED BREAKER
- NB = NEW BREAKER TO MATCH EXISTING IN TYPE, STYLE AND AIC RATING.

NOTICE

CONTRACTOR SHALL BE RESPONSIBLE FOR PROVIDING ARC FLASH LABELS AS REQUIRED BY NFPA 70 (NEC) 110.16, AND PERSONAL PROTECTIVE EQUIPMENT (PPE) RATING PLACARDS PER NFPA 70E FOR ALL NEW PANELBOARDS AND SWITCHGEAR.

CONTRACTOR SHALL ALSO BE RESPONSIBLE FOR FIELD MARKING PANELBOARDS AND SWITCHGEAR WITH THE AVAILABLE FAULT CURRENT AND THE DATE THE FAULT CURRENT CALCULATIONS WERE PERFORMED PER NFPA 70 (NEC) 110.24.

CHEHAYEB & ASSOCIATES, INC.
CONSULTING PROFESSIONAL ENGINEERS
3702 AZEELE ST. TAMPA, FL 33609
(813) 876-1415 www.chehayeb.com
LIC. #49521 SOUHEIL S. CHEHAYEB CERT. #7340
24-30

FWH Architects
3336 Grand Blvd. Suite 201
Holiday, Florida 34690
Ph. 727. 815. 3336
Fax 727. 815. 3337

TO THE BEST OF THE KNOWLEDGE OF THE ARCHITECTS AND ENGINEERS, PLANS AND SPECIFICATIONS COMPLY WITH THE APPLICABLE MINIMUM BUILDING CODES AND THE APPLICABLE MINIMUM FIRE SAFETY STANDARDS

SOUHEIL CHEHAYEB, P.E.
FL License No. 49521

no.	date	revision descriptions

STARBUCKS
SHELL CONSTRUCTION
1990 STATE ROAD 19
TAVARES, FL

03.25.2024
date

24007
comm. no.

POWER RISER DIAGRAM

E3.0

3/21/2024 2:18 PM

DIVISION 16 – ELECTRICAL

N13B

SECTION 16010 – GENERAL PROVISIONS

1. GENERAL

1.01 The following are minimum requirements and shall govern, except that building laws and/or drawings shall govern when their requirements are in excess thereof.

2. DRAWINGS AND SPECIFICATIONS

2.01 The architectural, mechanical, electrical and equipment drawings and specifications are hereby incorporated into and become a part of this Division. This Contractor shall examine all such drawings and specifications and become thoroughly familiar with provisions contained herein and the submission of his bid shall be construed as indicating such knowledge.

2.02 Electrical drawings are diagrammatic and are intended to show the approximate locations of equipment and piping. Dimensions given on the plans shall be verified in the field. Drawings may not be scaled to obtain exact dimensions.

2.03 The exact locations of apparatus, fixtures, equipment and conduits shall be ascertained from the Owner's representative in the field, and the work shall be laid out accordingly. Should the Contractor fail to ascertain such locations, the work shall be changed at his own expense when so ordered by the Owner. The Owner reserves the right to make minor changes in the location of conduit and equipment up to the time of installation, without additional cost.

2.04 The electrical drawings and specifications are intended to supplement each other and any material or labor called for in one shall be furnished and supplied even though not specifically mentioned in both. Labor and/or materials neither shown nor specified, but necessary for the completion and proper functioning of the system, shall be provided by this Contractor.

2.05 The work required under these specifications includes all labor, materials, equipment and services necessary to provide lighting and power systems, service entrances, motor controls and connections, branch circuiting, feeders, panels, fixtures, wiring devices, and other items shown on the plans or specified.

2.06 When the specification of an item is not identified with a particular area, the item shall pertain to all areas.

2.07 This Contractor shall furnish such labor and materials as hereinafter specified and as required to complete all electrical connections in accordance with the manufacturer's requirements for all mechanical equipment and Owner's equipment as shown and/or specified.

3. EXAMINATION OF SITE

3.01 Bidder is to visit the site and familiarize himself with existing conditions and satisfy himself as to the nature and scope of work. The submission of a bid will be evidence that such an examination has been made. Later claims for labor, equipment of materials required, or for difficulties encountered which could have been foreseen had an examination been made, will not be allowed.

4. DEFINITIONS

4.01 "Install" shall mean to place, fix in position, secure, anchor, wire, etc., including necessary appurtenances and labor so that equipment or installation will function as specified and intended.

4.02 "Furnish" shall mean to purchase and supply equipment or components.

4.03 "Provide" shall mean to "furnish and install".

4.04 "Or approved equal" shall mean equal in type, design, quality, style, color, etc., as determined by the Engineer/Architect.

5. INTERFERENCES

5.01 It shall be the duty of this Contractor to report any interferences between his work and that of any other Contractor to the Owner or Architect as soon as they are discovered. The Owner or Architect will determine which equipment shall be relocated regardless of which was first installed, and his decision shall be final.

6. MATERIALS AND WORKMANSHIP

6.01 All work shall be installed in a practical and workmanlike manner by competent workmen, skilled in their branch of the trade.

6.02 Unless otherwise specified or indicated on the drawings, all materials shall be new and free from defects and shall be the best of their several kinds.

6.03 All material and equipment shall meet or exceed standards specified by UL, NEMA, ANSI and IEEE wherever such standards have been established.

6.04 From time–to–time during the operation and at the completion thereof, this Contractor shall remove all debris and excess materials caused by his work and he shall leave the area of the operation broom clean.

6.05 All electrical equipment and material shall bear the Underwriter's Laboratories label.

7. SUPPORTS

7.01 This Contractor shall furnish and install all angle iron, channel iron, rods, supports or hangers required to install or mount panelboards, switchboards, or any electrical equipment called for on the plans, in these specifications, or as necessary to mount any piece of electrical equipment, material, or device. Conduit, fixtures, or any electrical devices shall not be supported from steel deck, bridging, ceiling, or ceiling support wires.

8. TEMPORARY CONSTRUCTION POWER AND LIGHTING

8.01 Sufficient temporary power, during construction, for heating, lighting, appliances, or motorized portable equipment shall be provided by the Electrical Contractor.

9. CODES, LAWS, PERMITS AND INSPECTIONS

9.01 Install all work in full accordance with codes, rules and regulations of municipal, city, county, state and public utility, and all other authorities having jurisdiction over the premises. This shall include all requirements of the City Building Code, regulations of the State Department of Industrial Relations, OSHA, ADA (Americans with Disabilities Act), and the requirements of the National Electrical Code, as interpreted by the Local Inspection Division. All these codes, rules, and regulations are hereby incorporated into this specification.

9.02 Comply with specification requirements which are in excess of code requirements and not in conflict with same.

9.03 The Contractor shall secure all permits and certificates of inspection incidental to the work, required by foregoing authorities. All such certificates shall be delivered to the Owner in duplicate, before final payment on contract will be allowed. The Contractor shall pay all fees, charges and other expenses in connection therewith.

10. FIELD CHANGES (AS BUILT DRAWINGS)

10.01 Keep one (1) set of working drawings and shop drawings at the job site for sole purpose of recording all changes made during construction. After completion of the work and before requesting final payment, the above mentioned drawings shall be delivered to the Owner.

11. LABELING AND NAMEPLATES

11.01 Permanently label transformers, switchboards, panelboards, time switches and safety switches indicating equipment or panels and areas which they serve.

11.02 Lighting and appliance panels shall be labeled as shown on drawings.

11.03 Electrical Contractor shall furnish and install identification for pull or junction boxes furnished by him.

11.04 Identify as to use on face of equipment by means of laminated black and white phenolic label with 3/8" letters engraved through black to white.

11.05 Materials

A. Nameplates: Engraved three–layer laminated plastic, white letters on a black background.

11.06 Installation

A. Degrease and clean surfaces to receive nameplates and tape labels.

B. Install nameplates and tape labels parallel to equipment lines.

C. Secure nameplates to equipment fronts using screws, rivets or adhesive. Secure nameplates to inside face of recessed panelboard doors in finished locations.

D. Mark every junction or pull box cover plates with the circuit number(s) of all wires contained therein.

11.07 Wire Identification:

A. Provide wire markers on each conductor at terminal strips and at final line and load connections. Identify with branch circuit or feeder number of power and lighting circuits, and with control wire number as indicated on equipment manufacturer's shop drawings for control wiring or as drawings indicate.

B. All wires shall be color coded. Color code branch circuit wiring as follows:

1. Three Phase System:

	120/208V	277/480V
Phase A	Black	Brown
Phase B	Red	Orange
Phase C	Blue	Yellow
Neutral	White	Gray
Ground	Green	Green

2. Switched Wires: Other than colors listed above

3. Travelers Between 3–Way Switches: Purple

4. Insulated Ground: Green with Yellow Stripes

12. GUARANTEE

12.01 In addition to guarantees of equipment by manufacturer of same, this Contractor shall also guarantee equipment provided by him and shall be held for a period of one (1) year to make good any defects in material and workmanship occurring during this period, at his sole expense. This one (1) year period shall start from the date of final acceptance by Owner.

13. SCOPE OF WORK

13.01 Furnish all labor and material necessary to complete the electrical work shown on the drawings, specified herein or required to complete the construction of the building as shown.

13.02 The listing herein of article or material, operation or method, required to be provided and installed by the Contractor (unless noted to be supplied by others) shall be of quality or subject to qualifications as noted. Each operation shall be performed according to standard practice, manufacturer's instructions, and conditions stated, providing, therefore, all necessary labor, equipment and incidentals.

13.03 The electrical Contractor shall schedule his work to conform to the progress of the other trades and Contractors employed on this project.

13.04 The electrical work shall include but is not limited to the following:

A. Demolition work as required.

B. Complete power and lighting distribution systems including panels, as shown on plans.

C. Complete branch circuit wiring system.

D. Temporary electric service as required for construction.

E. Testing of all electrical equipment.

F. Fire Alarm System as noted and/or shown.

G. Provide and install complete lighting system as shown on plans.

14. MANDATORY SHOP DRAWINGS

14.01 Submit a minimum of five (5) copies of all required electrical shop drawings.

14.02 Shop Drawings shall be submitted for:

Switchgear
All Lighting Fixtures
All Wiring Devices
Fire Alarm Devices

END OF SECTION 16010

SECTION 16100 – BASIC MATERIALS AND METHODS

1. CONDUIT

1.01 All wire shall be run in accordance with the applicable codes in corrosion resistant, rigid, threaded, metal conduit or electrical metallic tubing (E.M.T.), unless otherwise specifically stated herein.

A. Conduit below first floor slab, exposed to weather, or underground shall be rigid, threaded, galvanized, heavy wall type.

B. Carlon PVC, Type 40 heavy wall conduit with ground wire may be used underground below floor slab or pavement in lieu of rigid, threaded, galvanized conduit. PVC schedule 40 conduit shall not be run in or above first floor slab. PVC conduit shall terminate below floor slab with rigid, threaded metal conduit adapter. Conduit above slab shall be metal.

C. A ground conductor shall be supplied in all conduits and raceways. The ground conductor shall be copper, and sized per the N.E.C. or as shown on drawing, whichever is more stringent.

D. PVC conduit run beneath areas subject to heavy vehicular traffic such as commercial parking areas, drive through, etc. shall be concrete encased. This conduit shall comply with NEMA TC–6 and –8 (Power), TC–10 (Telephone), ASTM F512 (Concrete Encasement Applications) and UL–651 (Standard).

E. PVC conduit used between lighting standards shall be Carlon Type 40 min. and comply with NEMA TC–2, TC–3, and UL–651 (Standard).

1.02 Conduit and E.M.T. shall be delivered to the building in 10–foot lengths and each length shall have the Underwriter's Laboratories label.

1.03 Conduit and E.M.T. shall be run concealed in all finished areas of the building.

1.04 E.M.T. connectors and couplers shall be rain tight type made of die cast as manufactured by Thomas & Betts, Steel City, or Appleton. Bends and offsets shall be made with a hickey or power bender without kinking or destroying the smooth bore of the conduit. Parallelled conduits shall run straight and true with offsets uniform and symmetrical. Conduit terminals at boxes and cabinets shall be rigidly secured with locknuts and bushings as required by the National Electrical Code and local electrical code. Insulated bushings shall be used on all conduit 1–1/4" trade size and larger.

1.05 Conduit shall be securely fastened in place at no more than 8–foot centers, and hangers, supports or fastenings shall be provided at each conduiet, elbow and at the end of each straight run, terminating at a box or cabinet. Conduit shall not be suspended from the ceiling or ceiling suspension wires.

1.06 Horizontal and vertical conduit runs shall be supported by one–hole malleable straps or other approved metal device with suitable bolts, expansion shield or beam clamp for mounting to building structure or special brackets. Conduit shall be supported from structural steel or joist and independent of other piping. Do not support conduit from metal roof deck or any other support device of another trade.

1.07 Armored cable (BX) or nonmetallic sheathed cable (Romex) shall not be used.

1.08 No aluminum conduit shall be used.

1.09 Only short runs of flexible metal conduit not over 6' in length and having a ground conductor, shall be used for terminal connections to motors and also for electrical equipment where it is not practical to make final connection with rigid conduit. Flexible conduit exposed to weather shall be Seoltite.

1.10 Exposed conduit and conduit in ceiling space shall be run parallel to the building structure.

1.11 Conduit system shall conform to all the requirements of the National Electrical Code (N.E.C./N.F.P.A.–70) and local codes.

1.12 Metal Clad (MC) cable may be used where allowed by these drawings and conform to notes shown on sheet E0.0.

2. CONDUCTORS

2.01 Sizes of conductors for feeders are given on the drawings and no wire smaller than #12 gauge shall be used for branch lighting or power circuits. All wiring shall have the U.L. label and be of 98% conductivity copper. Aluminum wire or aluminum cable is not acceptable.

A. The gauge of all wire shall be in accordance with B&S standard.

2.02 All wire and cable for branch lighting or small power circuits shall have "NEC" Type "THHN/THWN" 600–volt insulation.

2.03 Wire and cable above #8 gauge shall be stranded Type "THWN" insulated for 600–volts.

2.04 For special conditions, as provided by the National Electrical Code, Type "R.H.H., A.V.A." or other required insulation shall be used.

2.05 Where lighting fixtures are used as raceways, 90 degree C. minimum insulated wire shall be used.

3. GROUNDING

3.01 This Contractor shall provide, install and connect a complete system of grounding for all equipment and structures. A good mechanical and electrical connection shall be made with approved grounding connectors.

3.02 Electrical system and equipment grounds shall comply with the N.E.C. as well as all local and state codes and regulations.

3.03 Panels, conduit systems, motor frames, lighting fixtures and other equipment that are part of this installation shall be securely grounded both mechanically and electrically in accordance with all codes.

3.04 System ground shall not exceed a maximum of ten (10) OHMS resistance. Verify existing grounding system and add additional grounding as required to meet the above specified value.

3.05 Main grounding system is existing.

3.06 A ground conductor shall be supplied in ALL conduit. It shall be insulated, stranded, annealed copper conductor.

4. TOGGLE SWITCHES AND RECEPTACLES

4.01 All general purpose switches and receptacles shall be ivory in color (except special configurations not available in ivory).

4.02 Acceptable device manufacturers are Hubbell, Arrow Hart, Leviton, or Bryant. This basis of design is Leviton.

4.03 Wall Switches:

A. Single poles #1221, double pole #1222 and three (3) way switches #1223 shall be rated 20–ampere, 120/277 volts.

B. Switches shall be mounted 4'–0" above finished floor to centerline.

4.04 Duplex receptacles shall be 20–ampere at 125–volts, Leviton catalogue #5362 or approved equal. Mount at 18" above floor to centerline or as noted on plans.

4.05 Outdoor receptacles shall be weatherproof with spring covers (Leviton #4926 plates).

5. WALL PLATES

5.01 Unless otherwise noted, all plates in finished areas for wall switches, receptacles and telephone outlets shall be smooth plastic.

5.02 All plates shall have full contact with the wall and boxes. Edges shall be parallel to the finished walls and ceilings.

6. OUTLETS

6.01 Locations of outlets are shown approximately on the drawings. Contractor shall refer to the shop drawings of the manufacturers of the equipment for the exact location of outlets for fixtures, motors, heaters and their respective control devices. Approximate locations of light fixtures are shown on the drawings.

6.02 Outlet boxes for concealed work shall be pressed steel boxes, galvanized and not less than #12 gauge, except floor boxes which shall be cast iron. Each ceiling outlet designated for a lighting fixture shall have a fixture support secured in place with nuts and bolts. Ceiling boxes shall be four inches (4") round and octagonal with lugs and screws for back plates. Wall outlets shall be four inches (4") square by 1–1/2" deep, single or double cover, except gang boxes of similar depth shall be used at locations requiring more than 2–gang.

6.03 Outlets on the exterior of the building shall be flush weatherproof type.

6.04 All outlets shall be firmly secured in place. Outlets in finished areas shall be flush with finished ceiling or walls.

6.05 All outlet locations in floor shall be verified with Owner's Representative before pouring of concrete floor.

7. BRANCH CIRCUIT WIRING

7.01 The Electrical Contractor shall provide and connect a complete system of panels, conduits, wire fittings, boxes, supports and all other miscellaneous materials required for equipment as indicated on the plans and ready for operation by the Owner.

7.02 All circuits shall be color coded.

END OF SECTION 16100

SECTION 16400 – ELECTRICAL SERVICE AND DISTRIBUTION

1. SECONDARY SERVICE

1.01 Electrical service shall be secondary, as shown on plans with grounded and neutral and secondary metering. Provide all necessary equipment and material and install the service, metering and distribution equipment accordingly.

1.02 The Electrical Contractor shall be responsible for contacting the power company to secure complete details for the connection to the existing primary transformer.

1.03 Electrical Contractor shall provide secondary service cables and conduits from the transformer to main service as indicated on drawings.

1.04 Site electrical shall be coordinated with local power company by Electrical Contractor.

1.05 Provide coordination, via the General Contractor, of the Site Electrical Contractor for the final locations, penetrations, and service tie–ins associated with secondary power service entrance conduits.

2. SAFETY SWITCHES

2.01 General

A. Switch shall be general duty type with visible, quick make, quick break blades. Swiches hall be U.L. listed and conform to NEMA Standards.

2.02 Enclosures

A. Steel enclosures with operating handle at side. NEMA 1 for general indoor use, NEMA 3R for general outdoor use and NEMA 4 (stainless steel) where indicated on the drawings. Manufacturer's standard enamel finish.

B. The enclosure shall be interlocked with the switch handle such that the enclosure door cannot be opened with switch in the "on" position. Switch handle shall be capable of being padlocked in the "off" position.

2.03 Ratings

A. Safety switches shall be rated for the continuous current and voltage indicated on the drawings. Where used in conjunction with motor circuits, units shall be horsepower rated for the size motor indicated.

B. Switches used as service entrance equipment shall be U.L. listed for use as service quipment.

2.04 Poles

A. Safety switches shall have the number of poles indicated on the drawings, but not fewer than one (1) pole for each ungrounded conductor to be opened.

2.05 Fuses

A. Where indicated, safety switches shall be fused in each ungrounded leg in accordance with the requirements of the Section entitled "Fuses".

2.06 Acceptable

A. Acceptable manufacturers are General Electric, Westinghouse, Challenger, Sq. D, or Seimens.

3. DISTRIBUTION PANELBOARDS (INCLUDING POWER PANELS)

3.01 Power and distribution panels shall be suitable for voltages indicated on plans and/or riser diagrams. Panels shall be 3–phase, 4–wire, solid neutral, aluminum buss, dead front with lugs in the mains, fuses and heavy–duty switches in branch circuits of size and number indicated on the plans. All lugs shall be U.L. approved CU/Al type.

3.02 Panels shall be provided with spares and full provisions for future breakers as shown.

3.03 Panels shall be manufactured as a complete unit by Siemens–ITE, Square D, General Electric Company; or Challenger, not an assembly of parts secured from a supply house.

3.04 Panelboards and switches shall be identified for "usage".

4. LIGHTING AND APPLIANCE PANELBOARDS

4.01 Lighting panels shall be dead front type, aluminum buss, with lugs only in the mains and branch circuits as indicated on the drawings. Panels shall have 20 amp single, double or 3–pole circuit breakers (capable of interrupting available short circuit current) as required in each branch circuit. Where breakers larger than 20 amperes are required, the sizes are noted on the drawings. Breakers shall be bolted to bus type, quick–make, quick–break and capable of interchanging 1,2 or 3–pole units. Multiple units shall be common trip. Provide spare breakers in each panel as shown. All lugs shall be U.L. approved CU/AL type.

4.02 Electrical Contractor shall arrange circuits as near as possible to circuit numbers on the drawings. At finish of job, Electrical Contractor shall take current reading checks of respective phases. A minimum of circuit connections shall be rearranged to balance (as closely as possible) the load on the panel.

4.03 Panels shall be enclosed in galvanized steel of code thickness. Cabinets shall be large enough to allow standard size wiring gutters on each side, top and bottom of panels. Mount not over 6'–6" from floor to top of panels.

5. GENERAL (FOR ALL PANELS AND PANELBOARDS)

5.01 Metal framed card holders with typewritten circuit directory must be provided for each panel. Directory shall be clear and designation shall match identification on equipment. Panelboards (switchboard, distribution, power panels and lighting panels) shall be identified by a label on the switch and/or panel door. Provide engraved laminated phenolic nameplates with 3/8" letters engraved through black to white.

5.02 All panels, safety switches, starters and in general, all equipment requiring lugs shall be equipped with solderless type U.L. approved lugs.

5.03 Provide all necessary unistrut, channel, backing and supports to mount switchboard and panelboards securely in place.

6. FUSES

6.01 This Contractor shall replace all fuses blown during construction and testing and shall provide a complete set of fuses in all fuse holders, switches, panels and all other devices requiring fuses.

6.02 Fuses in switchboard and main distribution panelboards in Electric room shall be as indicated on plans.

A. Provide label in each switch indicating fuse type, ampere rating and interrupting rating.

B. Replace all blown fuses up to final acceptance of job.

C. Provide and place in a wall mounted metal cabinet in Electrical Room a spare set of three (3) fuses for each size and type fuse used in switchboard in Electrical Room. The cabinet shall be similar to Bussman Spare Fuse Cabinet #SFC, with door, locking handle, internal shelf and fuse stock list.

6.03 Fuses shall be as specified herein and indicated on drawings. Alternate manufacturer is Littelfuse. In the event the Electrical Contractor wishes to furnish materials other than those specified, a written request, along with complete application data to assure a selectively coordinated system, shall be submitted to the Engineer for evaluation.

END OF SECTION

SECTION 16500 – LIGHTING

1. LIGHTING FIXTURES

1.01 All fixtures shall be as shown on Fixture Schedules, and approved by owner.

1.02 Unless otherwise indicated, all lighting fixtures shall be furnished and installed by Electrical Contractor as indicated on the Lighting Fixture Schedules, including lamps.

1.03 All fixtures shall bear the Underwriter's Laboratories label and shall be installed according to manufacturer's instruction.

1.04 All fixtures, unless otherwise indicated, shall be new and undamaged.

1.05 Surface–mounted fluorescent fixtures shall be mounted 1–1/2" from ceiling. Mount spacers and supports on 48" centers with additional support at the end of each row of fixtures.

1.06 This Contractor shall provide and install all necessary support media for all lighting fixtures including structural steel, angles, rods, etc. In general, fixtures shall be supported in a manner acceptable to the local inspection authorities. All fixtures shall be firmly supported from beams or joists.

1.07 This Contractor shall support all fixtures from building structural members and NOT from ceiling system.

END OF SECTION 16500

CHEHAYEB & ASSOCIATES, INC.
CONSULTING PROFESSIONAL ENGINEERS
3702 AZEELE ST.
TAMPA, FL 33609
(813) 876–1415
www.chehayeb.com
LIC. #49521 SOUHEIL S. CHEHAYEB CERT. #7340
24–30

FWH Architects
3336 Grand Blvd. Suite 201
Holiday, Florida 34690
Ph. 727. 815. 3336
Fax 727. 815. 3337

TO THE BEST OF THE KNOWLEDGE OF THE ARCHITECTS AND ENGINEERS, PLANS AND SPECIFICATIONS COMPLY WITH THE APPLICABLE MINIMUM BUILDING CODES AND THE APPLICABLE MINIMUM FIRE SAFETY STANDARDS

SOUHEIL CHEHAYEB, P.E.
FL License No. 49521

no.	date	revision descriptions

STARBUCKS
SHELL CONSTRUCTION
1990 STATE ROAD 19
TAVARES, FL

03.25.2024
date

24007
comm. no.

ELECTRICAL SPECIFICATIONS

E4.0

3/21/2024 2:07 PM